Asfora

Catalog 2026



se.com

Schneider Electric



Contents

Asfora presentation..... 4

Functions..... 10

Switches 10

Push buttons 12

Socket outlets.....14

Communication outlets.....16

Rotary dimmers and USB chargers.....19

Accessories 20

Technical information..... 21

Connections 21

Dimensions.....27

Reference numbers..... 28

Asfora makes life easier

With its sleek and elegant designs, the Asfora range delivers everything today's wiring devices should.

Your customers will appreciate the ease-of-use and wide range of everyday functions offered by Asfora wiring devices, designed to be as pleasing to the touch as they are to the eye.





white, glossy



cream, glossy



bronze, painted



athracite, painted



aluminium, painted



steel, painted

6 colors

2 finishes

50+ functions



Up to 6 gangs

Whether it is for a home or small office, Asfora multi-gang cover frames are designed for easy handling during installation and a neat and tidy appearance, with several functions housed in a single unit.

Light and comfort

Help your customers get the most out of their home interiors with unique lighting ambiances for each room and each time of day.



Switch



Switch with locator lamp and icon



Dimmer



Roller blind switch

Connectivity

Help your customers to keep the digital world close at hand. They can access all media from a single jack or enjoy music from a single source throughout the home.



TV/R/SAT socket



RJ45 data socket

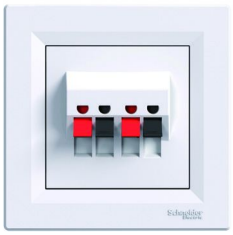

Loudspeaker socket

Protection

Socket outlets with shutters protect your customer from touching the metal parts under tension. IP44 products are often required in the bathroom and kitchen to protect from water splashes.



Socket outlet with lid



IP44 socket outlet with lid

New IP44 gaskets



In wet areas or conditions, switches and socket outlets must conform to strict regulatory standards, which state that they must be splash proof.

The new IP44 gasket for switches and single socket outlets has the advantage of being more universal, even on uneven surfaces. Moreover the gasket is flexible in the area of the box screws, so the screws do not need to be removed for installation. This makes installation quick and easy.

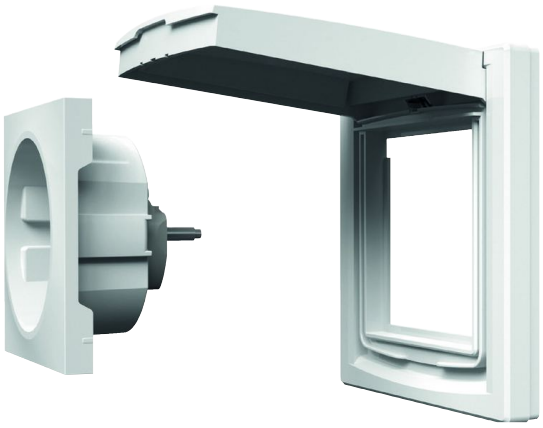

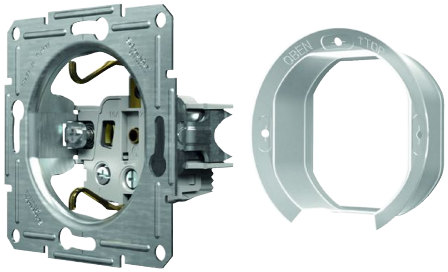

Quick and easy to install

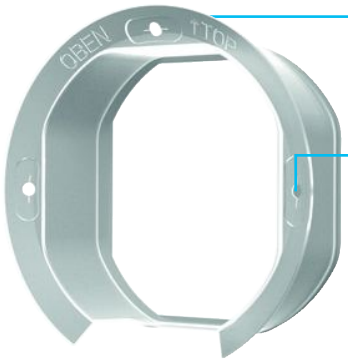

Universal shape
Also suitable for uneven walls

Flexible in the area of box screws
No need to remove screws for installation

IMPROVED!

Splash proof

Asfora IP44 gasket

The new generation of inserts for switches and single socket outlets

New inserts – new and improved features!

At Schneider Electric, we listen to your feedback and understand what you need to make your daily work routine easier and more efficient. This is why we recently improved the quality and functionality of inserts for the Asfora range. The updated Asfora range now features smaller, more compact inserts, a profiled fixing frame, improved wire inlets and release buttons, and wide, profiled claws with a return spring.

NEW!

+ easy
+ fast
+ convenient

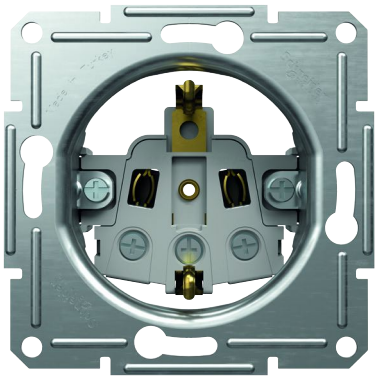

socket outlet insert

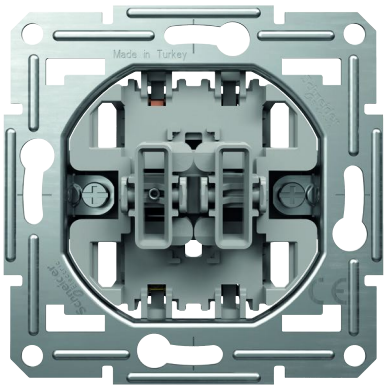

switch insert

Asfora pin earth

Asfora side earth

Smaller and more compact inserts

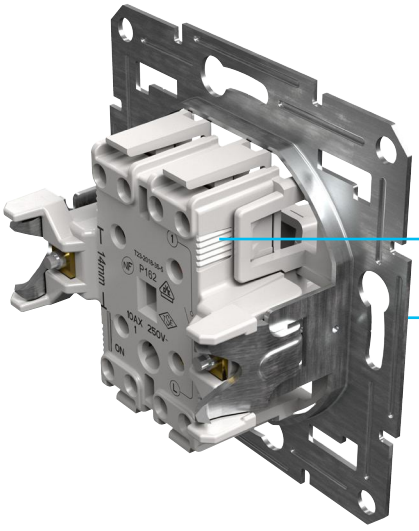

Smaller and more compact inserts give better insert rotation on box screws, more space to manage wires in the box, and a better view inside the box

Redesigned insert shape offers additional handling grips for better handling

Improved fixing frame and claws

For a simple, fast, and safe installation

Thanks to their redesigned mechanism the claws extend out straight and smoothly, ensuring a perfect alignment to the wall boxes during assembly. Moreover they ensure that the insert fixes securely in the box.

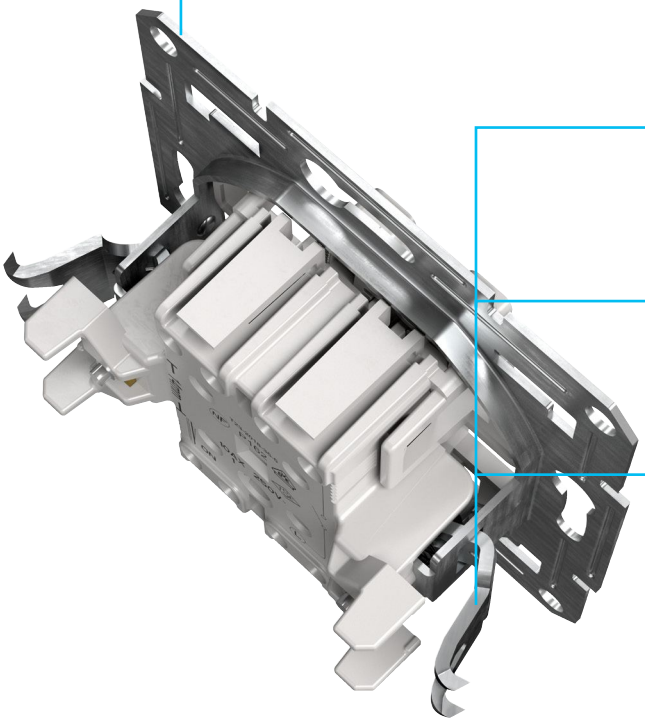

Improved robustness of profiled fixing frame ensures a stable product, even if force is exerted to it.

Broader, profiled claws provide better stabilization

Claw-return function makes mounting and realignment easier than ever

Protected claws sharp edges are hidden

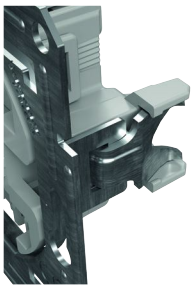

The claws are fully retracted in the sides of the housing

Clear connection diagram, improved wire inlets for switches, and better shaped release levers for screwless switches

Our innovative new features will make all the difference to your daily installation workflow.

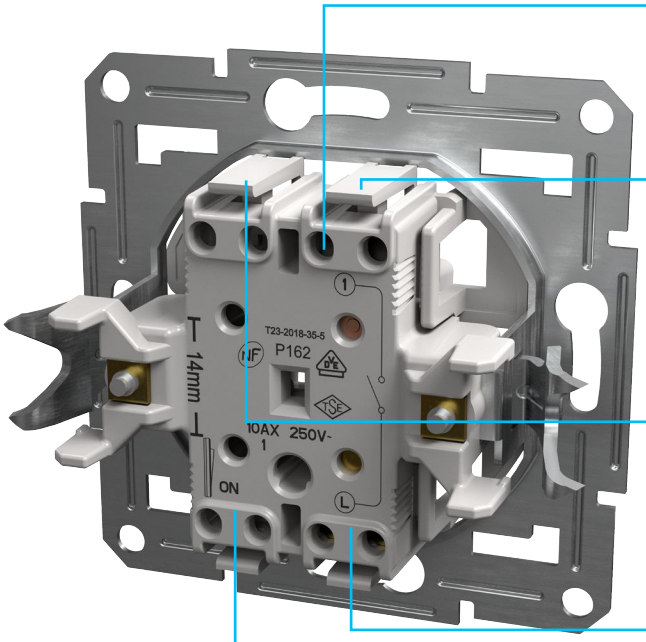

Conical wire inlets
guide the wire directly and easily in place

Wider release buttons
make it easier to release fastened wires for deinstallation

Release buttons rest position
makes it easier to enter the insert into the box

Wiring diagram
helps you to avoid wiring errors

ON marking
for easier and faster positioning of the product without testing

Switches – 10 AX – 250 V AC

	1-way	2-way	Intermediate	2-circuit	Double 2-way	2-pole	3-circuit
		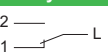	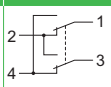		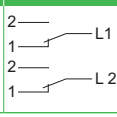	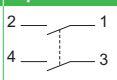	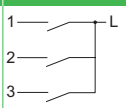
Screwless terminals							
							
With cover frame							
White	EPH0100121	EPH0400121	EPH0500121	EPH0300121	EPH0600121	EPH0200121	–
Cream	EPH0100123	EPH0400123	EPH0500123	EPH0300123	EPH0600123	EPH0200123	–
							
Without cover frame							
White	EPH0170121	EPH0470121	EPH0570121	EPH0370121	EPH0670121	EPH0270121	–
Cream	EPH0170123	EPH0470123	EPH0570123	EPH0370123	EPH0670123	EPH0270123	–
Anthracite	EPH0100171	EPH0400171	EPH0500171	EPH0300171	EPH0600171	EPH0200171	–
Steel	EPH0100162	EPH0400162	EPH0500162	EPH0300162	EPH0600162	–	–
Aluminium	EPH0100161	EPH0400161	EPH0500161	EPH0300161	EPH0600161	–	–
Bronze	EPH0100169	EPH0400169	EPH0500169	EPH0300169	EPH0600169	EPH0200169	–
Screw terminals							
							
With cover frame							
White	EPH0100321	EPH0400321	EPH0500321	EPH0300321	EPH0600321	EPH0200321	EPH2100121
Cream	EPH0100323	EPH0400323	–	EPH0300323	–	–	EPH2100123
							
Without cover frame							
White	–	–	–	–	–	–	EPH2170121
Cream	–	–	–	–	–	–	EPH2170123
Anthracite	EPH0100371	EPH0400371	EPH0500371	EPH0300371	EPH0600371	–	EPH2100171
Steel	EPH0100362	EPH0400362	–	EPH0300362	–	–	EPH2100162
Aluminium	EPH0100361	EPH0400361	–	EPH0300361	–	–	EPH2100161
Bronze	–	–	–	–	–	–	EPH2100169

Switches IP44 – 10 AX – 250 V AC

	1-way	2-way
	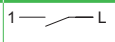	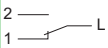
Screwless terminals		
		
With cover frame		
White	EPH0100221	EPH0400421
Cream	EPH0100223	EPH0400423
Anthracite	EPH0100271	EPH0400471
Steel	EPH0100262	–
Aluminium	EPH0100261	–

Characteristics

- Maximum load for self ballasted lamps (LED, CFL, etc.):
  10 AX – 250 V AC switches: 100 W
  16 AX – 250 V AC switches: 200 W

Switches with locator lamp – 10 AX – 250 V AC

	1-way	2-way
		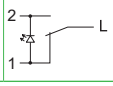
Screwless terminals		
		
With cover frame		
White	EPH1400121	EPH1500121
Cream	EPH1400123	–
		
Without cover frame		
White	EPH1470121	EPH1570121
Anthracite	EPH1400171	EPH1500171
Steel	EPH1400162	–
Aluminium	EPH1400161	–
Screw terminals		
		
With cover frame		
White	EPH1400321	EPH1500321

Switches with locator lamp – 16 AX – 250 V AC

	1-way
	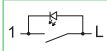
Screw terminals	
	
With cover frame	
White	EPH1430321

Roller blind switches – 10 A – 250 V AC

	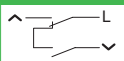
Screwless terminals	
	
With cover frame	
White	EPH1300521
Cream	EPH1300523
	
Without cover frame	
White	EPH1370521
Cream	EPH1370523
Anthracite	EPH1300571
Steel	EPH1300562
Aluminium	EPH1300561
Bronze	EPH1300569

Key card switches – 10 A – 250 V AC

	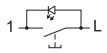
Screwless terminals	
	
With cover frame	
White	EPH6200121
Cream	EPH6200123
	
Without cover frame	
White	EPH6270121
Cream	EPH6270123
Anthracite	EPH6200171
Steel	EPH6200162
Aluminium	EPH6200161
Bronze	EPH6200169

Characteristics

- Maximum load for self ballasted lamps (LED, CFL, etc.):
  10 AX – 250 V AC switches: 100 W
  16 AX – 250 V AC switches: 200 W

Push buttons – 10 A – 250 V AC

	Single			Double
	1-way	1-way with "bell" symbol	1-way with "light" symbol	Double 1-way
	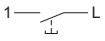	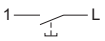	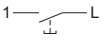	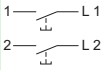
Screwless terminals				
				
With cover frame				
White	EPH0700121	EPH0800121	EPH0900121	EPH1100121
Cream	EPH0700123	EPH0800123	EPH0900123	EPH1100123
				
Without cover frame				
White	EPH0770121	EPH0870121	EPH0970121	EPH1170121
Cream	EPH0770123	EPH0870123	–	–
Anthracite	EPH0700171	EPH0800171	–	EPH1100171
Steel	EPH0700162	EPH0800162	EPH0900162	EPH1100162
Aluminium	EPH0700161	EPH0800161	–	–
Bronze	EPH0700169	EPH0800169	EPH0900169	EPH1100169
Screw terminals				
				
With cover frame				
White	EPH0800321	–	–	EPH1100321
Cream	EPH0800323	–	–	–
				
Without cover frame				
Anthracite	EPH0800371	–	–	–
Steel	EPH0800362	–	–	–

Asfora
Push buttons

Push buttons with locator lamp – 10 A – 250 V AC

	1-way	1-way with "bell" symbol	1-way with "light" symbol	1-way with "stairs" symbol
	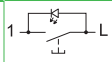	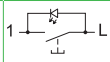	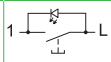	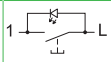
Screwless terminals				
				
With cover frame				
White	EPH1600121	EPH1700121	EPH1800121	EPH1900121
Cream	EPH1600123	–	–	–
				
Without cover frame				
Anthracite	EPH1600171	EPH1700171	EPH1800171	–
Steel	EPH1600162	–	–	–
Aluminium	EPH1600161	–	–	–
Bronze	EPH1600169	–	–	–
Screw terminals				
				
With cover frame				
White	EPH1600321	EPH1700321	–	–

Push button – 12 V AC with locator lamp and label holder

1-way
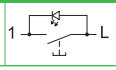
Screwless terminals

With cover frame
White EPH1601521

Roller blind Push buttons – 10 A – 250 V AC

	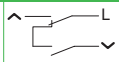
Screwless terminals	
	
With cover frame	
White	EPH1300121
Cream	EPH1300123
	
Without cover frame	
White	EPH1370121
Cream	EPH1370123
Anthracite	EPH1300171
Steel	EPH1300162
Aluminium	EPH1300161
Bronze	EPH1300169
Screw terminals	
	
With cover frame	
White	EPH1300321
Cream	EPH1300323
	
Without cover frame	
Anthracite	EPH1300371
Steel	EPH1300362
Aluminium	EPH1300361
Bronze	EPH1300369

Socket outlets

Socket outlets – 2P – 16 A – 250 V AC

	Single	Double [*]	Double PL standard [*]
Screw terminals			
			
With cover frame			
White	EPH3000121	EPH9700121 [*]	EPH9700221 [*]
Cream	EPH3000123	EPH9700123 [*]	–
			
Without cover frame			
Anthracite	EPH3000171	–	–
Steel	EPH3000162	–	–
Aluminium	EPH3000161	–	–
Bronze	EPH3000169	–	–

[*] Not compatible with frame system.

Socket outlets – 2P+E (pin earth) – 16 A – 250 V AC

	Single	Single with shutters	Single with shutters and lid IP44	Single with shutters and lid IP44 [*]	Single with red center plate	Double CZ, SK standards [*]	Double PL standard
Screw terminals							
							
With cover frame							
White	EPH2800121	EPH2800221	EPH2800621	EPH2800321 [*]	EPH2800421	EPH9800121 [*]	EPH9800221 [*]
Cream	EPH2800123	EPH2800223	–	EPH2800323 [*]	–	EPH9800123 [*]	–
Anthracite	–	–	–	EPH2800371 [*]	–	–	EPH9800271 [*]
Steel	–	–	–	EPH2800362 [*]	–	–	–
							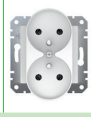
Without cover frame							
White	EPH2870121	–	–	–	–	–	EPH9810221
Cream	EPH2870123	–	–	–	–	–	EPH9810223
Anthracite	EPH2800171	EPH2800271	EPH2800671	–	–	–	EPH9810271
Steel	EPH2800162	EPH2800262	EPH2800662	–	–	–	EPH9810262
Aluminium	EPH2800161	EPH2800261	–	–	–	–	EPH9810261
Bronze	EPH2800169	EPH2800269	–	–	–	–	–
Red	EPH2870442	–	–	–	–	–	–

[*] Not compatible with frame system.

Socket outlets

Socket outlets – 2P+E (side earth) – 16 A – 250 V AC

	Single	Single with shutters	Single with lid	Single with shutters and lid IP44 [*]	Single with shutters and red center plate	Double [*]
Screw terminals						
						
With cover frame						
White	EPH2900121	EPH2900221	EPH3100121	EPH3100321 [*]	EPH2900521	EPH9900121 [*]
Cream	EPH2900123	EPH2900223	EPH3100123	EPH3100323 [*]	EPH2900523	EPH9900123 [*]
Anthracite	–	–	–	EPH3100371 [*]	–	EPH9900171 [*]
Steel	–	–	–	EPH3100362 [*]	–	EPH9900162 [*]
Aluminium	–	–	–	EPH3100361 [*]	–	EPH9900161 [*]
Bronze	–	–	–	EPH3100369 [*]	–	EPH9900169 [*]
						
Without cover frame						
White	EPH2970121	EPH2970221	EPH3170121	–	–	–
Cream	EPH2970123	EPH2970223	EPH3170123	–	–	–
Anthracite	EPH2900171	EPH2900271	EPH3100171	–	–	–
Steel	EPH2900162	EPH2900262	EPH3100162	–	–	–
Aluminium	EPH2900161	EPH2900261	EPH3100161	–	–	–
Bronze	EPH2900169	EPH2900269	EPH3100169	–	–	–

[*] Not compatible with frame system.

Cable outlets

Screw terminals

With cover frame
White EPH5500121
Cream EPH5500123

Without cover frame
Anthracite EPH5500171
Steel EPH5500162
Aluminium EPH5500161
Bronze EPH5500169

Communication outlets

Antenna outlets

	Ending (1 dB)					
	TV	TV-R	TV-SAT	TV-R-SAT	TV-SAT-SAT	SAT
Type of connector	IEC Male	IEC Male + Female	IEC Male + F	IEC Male + Female + F	IEC Male + F + F	F
						
With cover frame						
White	EPH3200121	EPH3300121	EPH3400121	EPH3500121	EPH3600121	EPH3700121
Cream	EPH3200123	–	–	–	–	EPH3700123
						
Without cover frame						
White	EPH3270121	EPH3300721	EPH3470121	–	EPH3670121	EPH3770121
Cream	EPH3270123	–	EPH3470123	–	–	EPH3770123
Anthracite	EPH3200171	EPH3300171	EPH3400171	EPH3500171	EPH3600171	EPH3700171
Steel	EPH3200162	–	EPH3400162	EPH3500162	–	EPH3700162
Aluminium	EPH3200161	–	EPH3400161	EPH3500161	–	EPH3700161
Bronze	EPH3200169	–	–	EPH3500169	EPH3600169	EPH3700169

	Intermediate (4 dB)					
	TV	TV-R	TV-SAT	TV-R-SAT		SAT
						
With cover frame						
White	EPH3200221	EPH3300221	EPH3400221	EPH3500221	–	EPH3700221
						
Without cover frame						
Anthracite	EPH3200271	EPH3300271	–	EPH3500271	–	–
Aluminium	–	–	–	EPH3500261	–	–
Bronze	–	–	–	–	–	–

	Intermediate (8 dB)	
	TV	TV-SAT
		
With cover frame		
White	EPH3200321	EPH3400321
		
Without cover frame		
White	EPH3270321	EPH3470321
Anthracite	EPH3200371	EPH3400371
Steel	–	EPH3400362
Aluminium	EPH3200361	EPH3400361
Bronze	–	EPH3400369

	Individual (1 dB)
	TV-SAT
Type of connector	IEC Male + F
	
With cover frame	
White	EPH3400421

Communication outlets

Data and telephone outlets

	Single			
	RJ11	RJ45 Cat.5e UTP	RJ45 Cat.5e STP	RJ45 Cat.6 UTP
Terminals	Screw	IDC	IDC	IDC
				
With cover frame				
White	EPH4100121	EPH4300121	EPH5000121	EPH4700121
Cream	–	EPH4300123	–	EPH4700123
				
Without cover frame				
White	EPH4170121	EPH4370121	–	EPH4770121
Cream	EPH4170123	–	–	EPH4770123
Anthracite	EPH4100171	EPH4300171	EPH5000171	EPH4700171
Steel	EPH4100162	EPH4300162	–	EPH4700162
Aluminium	EPH4100161	EPH4300161	–	EPH4700161
Bronze	EPH4100169	EPH4300169	–	EPH4700169

	Double					
	RJ11	RJ45 Cat.5e UTP		RJ45 Cat.6 UTP	RJ45 + RJ11 Cat.6 UTP	RJ45 + RJ12 Cat.5e UTP
Terminals	Screw	IDC		IDC	IDC - Screw	IDC
						
With cover frame						
White	EPH4200121	EPH4400121	–	EPH4800121	–	EPH4900121
Cream	–	EPH4400123	–	EPH4800123	EPH5200123	–
						
Without cover frame						
White	–	EPH4470121	–	EPH4870121	EPH5270121	–
Cream	–	–	–	–	EPH5270123	–
Anthracite	EPH4200171	EPH4400171	–	EPH4800171	EPH5200171	–
Steel	EPH4200162	EPH4400162	–	EPH4800162	EPH5200162	–
Aluminium	–	EPH4400161	–	–	EPH5200161	–
Bronze	–	EPH4400169	–	–	–	–

Loudspeaker outlets

Double loudspeaker outlets	
Screwless terminals	
	
With cover frame	
White	EPH5700121
	
Without cover frame	
White	EPH5770121
Anthracite	EPH5700171
Aluminium	EPH5700161

Multimedia outlets

	HDMI
	
With cover frame	
White	EPH4500121
	
Without cover frame	
Anthracite	EPH4500171

Communication outlets

Fiber optic outlets

	Duplex LC APC	
		
	With cover frame	
☐ White	EPH4600121	
	Simplex SC APC	
	Single	Double
		
	Without cover frame	
☐ White	EPH4671121	EPH5370121

Center plate

	TV+SAT
Screw terminals	
	
☐ White	EPH3470121C

Rotary dimmers and USB chargers

Rotary dimmers LED – 230 V AC

Designed to switch and dim ohmic or capacitive loads.

	RC (1) 0-370 W
Screw terminals	
	
	With frame
White	**EPH6800121**
Cream	**EPH6800123**
White (DIY)	**EPH6801121**
	
	Without frame
White	**EPH6870121**
Cream	**EPH6870123**
Anthracite	**EPH6800171**
Steel	**EPH6800162**
Aluminium	**EPH6800161**
Bronze	**EPH6800169**

Loads			Without neutral	With neutral
LED lamp 230 V		LED	3...200 W (max. 1.3 A)	0...200 W (max. 1.3 A)
Incandescent lamp 230 V			3...370 W	0...370 W
Halogen lamp 230 V			3...370 W	0...370 W
LV halogen lamps 12 V	dimmable electronic transformer		3...370 W	0...370 W

Characteristics

- Brightness memory function
- Minimum brightness settings
- Wire configuration with and without neutral. It is recommended to connect the neutral wire whenever available to improve the dimming performance
- Electronic overload protection, overheating protection, short-circuit protection

(1) RC = Resistive and Capacitive loads.

USB chargers

	Double USB charger type A + C, 21 W	Double USB charger type A + C, 45 W
		
With cover frame		
White	**EPH2700521**	**EPH2700421**
Cream	**EPH2700523**	–
		
Without cover frame		
Anthracite	**EPH2700571**	**EPH2700471**
Steel	**EPH2700562**	–
Aluminium	**EPH2700561**	–
Bronze	**EPH2700569**	–
• Nominal input voltage: 220–240 V~, 50/60 Hz • USB Output (type C): 5.0 V ⎓ 3.0 A 15.0 W 9.0 V ⎓ 2.33 A 21.0 W 12.0 V ⎓ 1.75 A 21.0 W 5.0 V–12.0 V ⎓ 0.1 A–3.0 A Max 21.0 W • USB output (type A): 5.0 V ⎓ 3.0 A 15.0 W 9.0 V ⎓ 2.0 A 18.0 W 12.0 V ⎓ 1.5 A 18.0 W • Maximum output power (A + C): Max. 5.0 V ⎓ 3.4 A 17.0 W (Max 2.4 A for each port) • Charger protocol: PD 3.1 with PPS and further modes • No-load power consumption: < 0.05 W (in stand-by)	• Nominal input voltage: 220–240 V~, 50/60 Hz, 1.0 A • USB output (type C): 5.0 V ⎓ 3.0 A 15.0 W 9.0 V ⎓ 3.0 A 27.0 W 12.0 V ⎓ 3.0 A 36.0 W 15.0 V ⎓ 3.0 A 45.0 W 20.0 V ⎓ 2.25 A 45.0 W • USB output (type A): 5.0 V ⎓ 1.5 A 7.5 W • Maximum output power: Max. 52.5 W (A+C) • Charger protocol: PD 3.0 with PPS and further modes • No-load power consumption: < 0.08 W (in stand-by)	

Accessories

Cover frames

Horizontal

	1 gang	2 gang	3 gang	4 gang	5 gang	6 gang
						
White	EPH5800121	EPH5800221	EPH5800321	EPH5800421	EPH5800521	EPH5800621
Cream	EPH5800123	EPH5800223	EPH5800323	EPH5800423	EPH5800523	EPH5800623
Anthracite	EPH5800171	EPH5800271	EPH5800371	EPH5800471	EPH5800571	EPH5800671
Steel	EPH5800162	EPH5800262	EPH5800362	EPH5800462	EPH5800562	EPH5800662
Aluminium	EPH5800161	EPH5800261	EPH5800361	EPH5800461	EPH5800561	EPH5800661
Bronze	EPH5800169	EPH5800269	EPH5800369	EPH5800469	EPH5800569	EPH5800669

Vertical

	2 gang	3 gang
	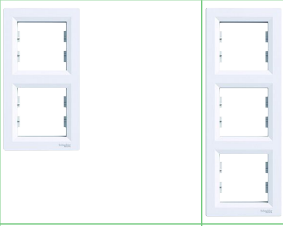	
White	EPH5810221	EPH5810321
Cream	EPH5810223	EPH5810323
Anthracite	EPH5810271	EPH5810371
Steel	EPH5810262	EPH5810362
Aluminium	EPH5810261	EPH5810361
Bronze	EPH5810269	EPH5810369

Surface-mounted boxes

	1 gang	Extension multi-gang
Screwless and screw terminals		
		
White	EPH6100121	EPH6100221
Cream	EPH6100123	EPH6100223
Anthracite	EPH6100171	EPH6100271
Steel	EPH6100162	EPH6100262
Aluminium	EPH6100161	–
Bronze	EPH6100169	EPH6100269

Blind covers



With cover frame	
White	EPH5600121
Cream	EPH5600123
	
Without cover frame	
White	EPH5670121
Cream	EPH5670123
Anthracite	EPH5600171
Steel	EPH5600162
Aluminium	EPH5600161
Bronze	EPH5600169

Technical information
Switches and Push buttons

Connection examples

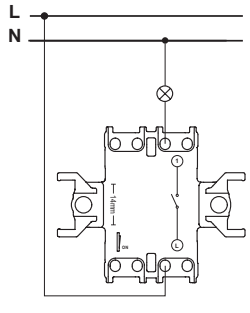

1-way switch

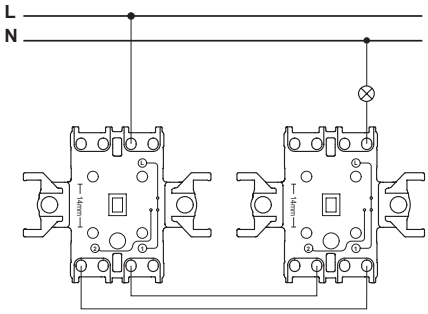

Two 2-way switches

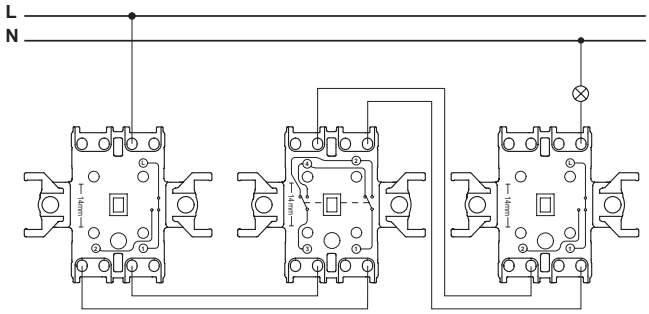

Two 2-way switches + 1 intermediate switch

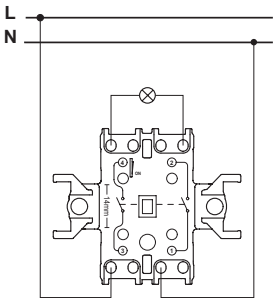

2-pole switch

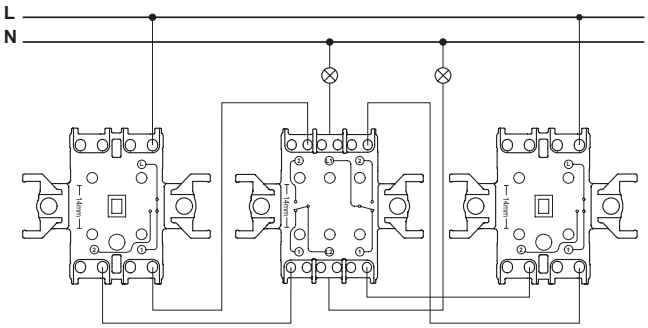

Two 2-way switches + one double 2-way switch acting on two different loads

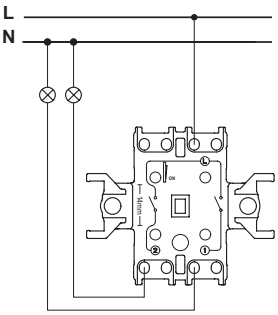

2-circuit switch

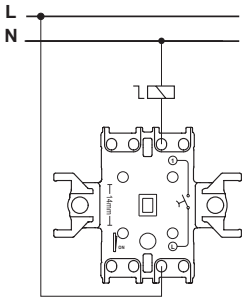

Push-button

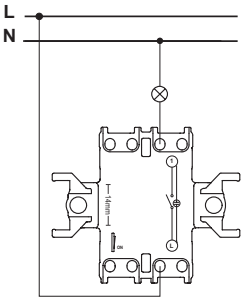

1-way switch
with locator lamp

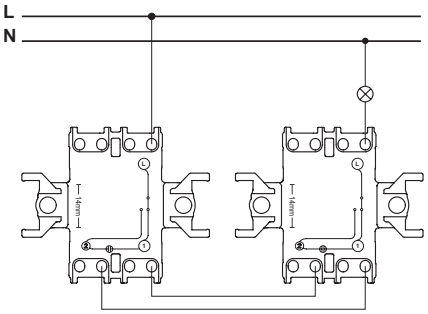

Two 2-way switches with locator lamps

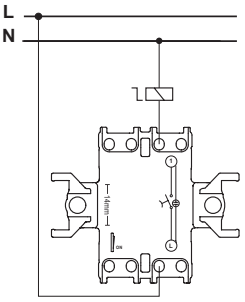

Push-button
with locator lamp

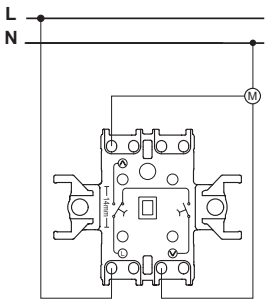

Roller blind push-button

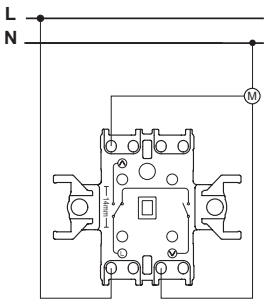

Roller blind switch

Technical information
Dimmers

Rotary electronic dimmer

Installation

You must reduce the maximum allowed load due to the decreased heat dissipation when the device is not mounted into a single standard flushmounted mounting box.

Load reduction by	Mounted in cavity walls (1)	Several installed together in combination (1)	In 1-gang or 2-gang surface-mounted housing	In 3-gang surface-mounted housing
25 %	■	■		
30 %			■	
50 %				■

(1) If several factors apply, add the load reductions together.

Connections

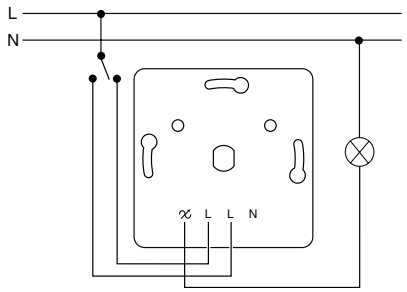

With neutral wire

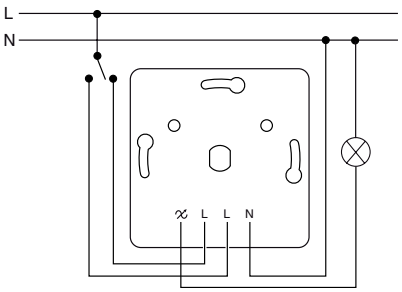

Without neutral wire

Substitution examples

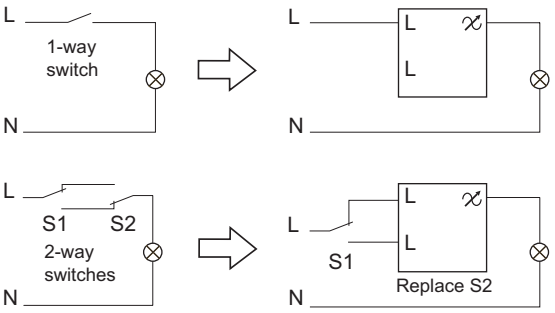

Technical information
USB Chargers

USB Chargers type A+C (21 W)

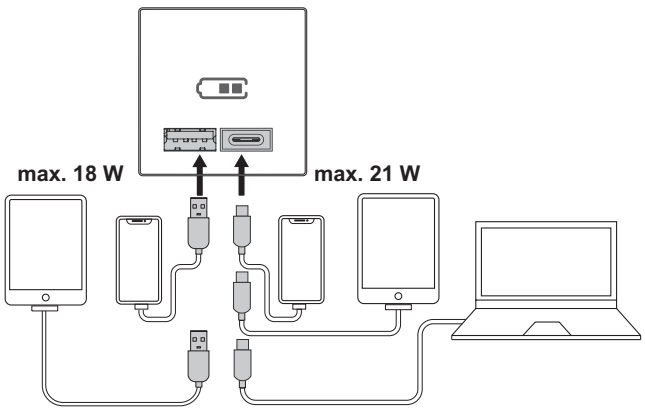

USB chargers type A+C - EPH27005xx

Connections

- Nominal input voltage: 220-240 V~, 50/60 Hz
- USB output (type C): 5.0 V ⎓ 3.0 A 15.0 W
  9.0 V ⎓ 2.33.0 A 21.0 W
  12.0 V ⎓ 1.75 A 21.0 W
  5.0 V-12.0 V ⎓ 0.1 A-3.0 A
  Max 21.0 W
- USB output (type A): 5.0 V ⎓3.0 A 15.0 W
  9.0 V ⎓ 2.0 A 18.0 W
  12.0 V ⎓ 1.5 A 18.0 W
- Maximum output power: Max. 5.0 V ⎓3.4 A 17.0 W
  (Max 2.4 A for each port)
- Charger protocol: PD 3.1 with PPS and further modes
- No-load power consumption: < 0.05 W (in stand-by)

USB Chargers type A+C (45 W)

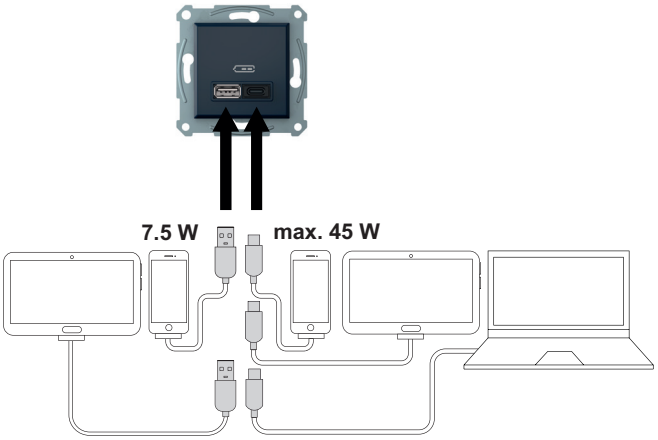

USB chargers type A+C - EPH27004xx

Connections

- Nominal input voltage: 220-240 V~, 50/60 Hz, 1.0 A
- USB output (type C): 5.0 V ⎓ 3.0 A 15.0 W
  9.0 V ⎓ 3.0 A 27.0 W
  12.0 V ⎓ 3.0 A 36.0 W
  15.0 V ⎓ 3.0 A 45.0 W
  20.0 V ⎓ 2.25 A 45.0 W
- USB output (type A): 5.0 V ⎓ 1.5 A 7.5 W
- Maximum output power: Max. 52.5 W (A+C)
- Charger protocol: PD 3.0 with PPS and further modes
- No-load power consumption: < 0.08 W (in stand-by)

Technical information
Antenna outlets

Type			TV			TV-R		
			Ending 1 dB	Intermediate 4 dB	Intermediate 8 dB	Ending 1 dB	Intermediate 4 dB	Intermediate 8 dB
			EPH32001xx EPH32701xx	EPH32002xx	EPH32003xx EPH32703xx	EPH33001xx EPH33007xx	EPH33002xx	EPH33003xx
Loss		dB	1	4	8	1	4	8
Operating Frequency	SAT	MHz	-	-	-	-	-	-
	TV/VHF		5-862	5-862	5-862	118-470	118-470	118-470
	TV/UHF		5-862	5-862	5-862	470-830	470-830	470-830
	R		-	-	-	10-108	10-108	10-108
Pass through attenuation	SAT	dB	-	-	-	-	-	-
	TV/VHF		1	4	8	1.5	3.7	9.7
	TV/UHF		1	4	8	2.8	4.6	9.8
	R		-	-	-	11.1	9.3	8.1
Outlet atenuation		dB	1	4	8	0.5	0.5	0.5
DC Current			-	-	-	-	-	-
Outlets/line			-	-	-	1	4	4

Type			TV-SAT				TV-R-SAT		
			Ending 1 db	Intermediate 4 dB	Intermediate 8 dB	Individual 1 dB	Ending 1 db	Intermediate 4 dB	Intermediate 8 dB
			EPH34001xx EPH34701xx	EPH34002xx	EPH34003xx EPH34703xx	EPH34004xx	EPH35001xx	EPH35002xx	EPH35003xx
Loss		dB	1	4	8	1	1	4	8
Operating Frequency	SAT	MHz	950-2400	950-2400	950-2400	950-2400	950-2400	950-2400	950-2400
	TV/VHF		118-470	118-470	118-470	118-470	118-470	118-470	118-470
	TV/UHF		470-830	470-830	470-830	470-830	470-830	470-830	470-830
	R		-	-	-	-	10-108	10-108	10-108
Pass through attenuation	SAT	dB	13	12.1	10.3	13	4.1	4.2	4.3
	TV/VHF		2.2	4.5	10.8	2.2	1.5	4.9	11.1
	TV/UHF		1	4.8	12.3	1	2.7	5.1	11.6
	R		-	-	-	-	14.8	16.8	15.2
Outlet atenuation		dB	-	0.5	0.5	-	-	0.5	0.5
DC Current			in SAT outlet	in SAT outlet	in SAT outlet	in SAT outlet	in SAT outlet	in SAT outlet	in SAT outlet
Outlets/line			1	4	4	1	1	4	4

Type			TV-SAT-SAT	SAT	
			Ending 1 dB	Ending 1 db	Intermediate 4 dB
			EPH36001xx EPH36701xx	EPH37001xx EPH37701xx	EPH37002xx
Loss		dB	1	1	4
Operating Frequency	SAT	MHz	950-2400	950-2400	950-2400
	TV/VHF		118-470	118-470	118-470
	TV/UHF		470-830	470-830	470-830
	R		-	10-108	10-108
Pass through attenuation	SAT	dB	13	4.1	4.2
	TV/VHF		2.2	1.5	4.9
	TV/UHF		1	2.7	5.1
	R		-	14.8	16.8
Outlet atenuation		dB	-	-	0.5
DC Current			in SAT outlet	in SAT outlet	in SAT outlet
Outlets/line			1	1	4

Only one of the outlets in "Ending TV / R outlet" can also be used as individual one.
Only the cable connected outlet in "Individual TV / SAT outlet" can be used as ending one in linear installation.

Technical information
Antenna outlets

TV/R applications

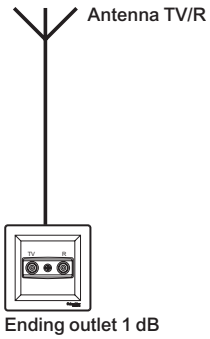

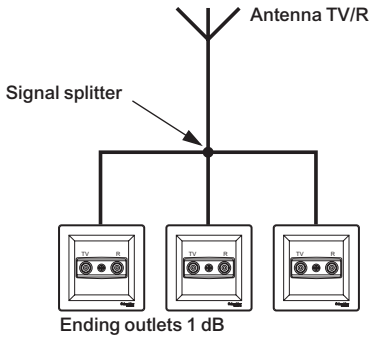

Linear installation inserts intermediate 4 dB, 8 dB and end of line 1 dB
(always in the end)

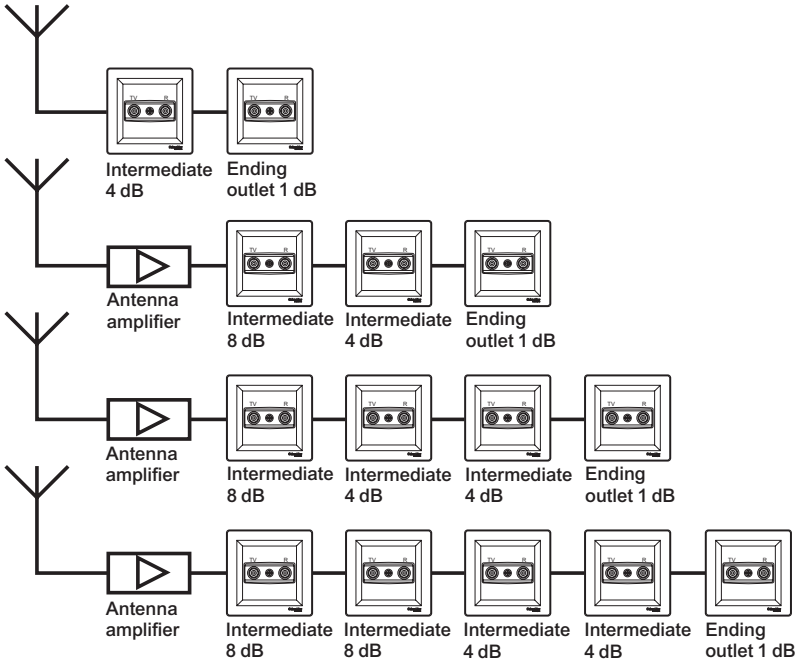

Technical information
Surface-mounted boxes

1 gang mounting
(EPH61001xx)

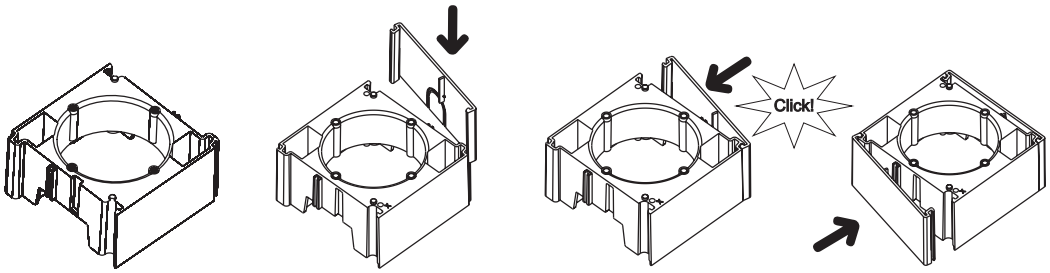

Multi-gang mounting
(EPH61001xx + EPH61002xx)

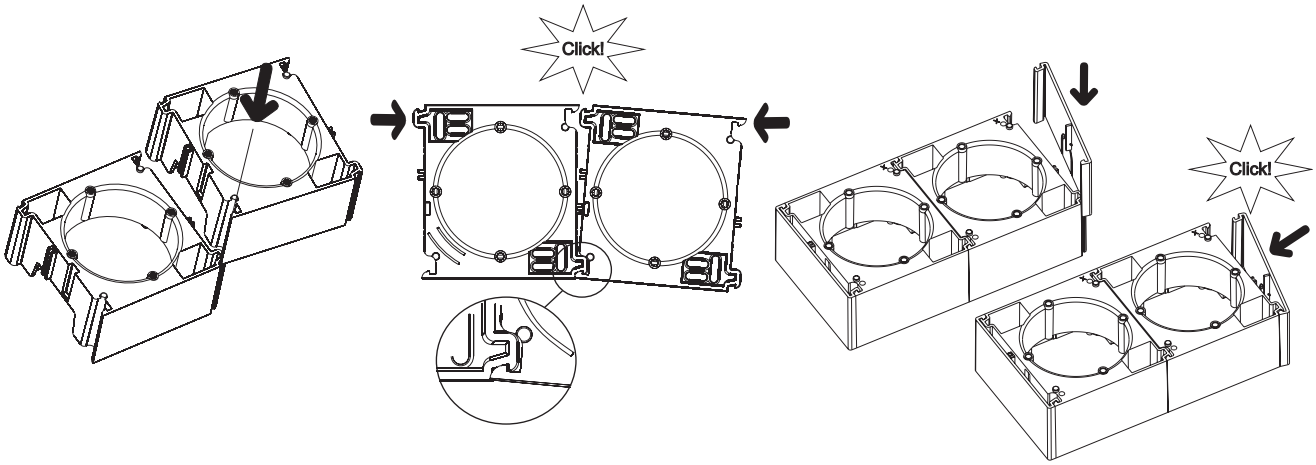

Mounting with TV/R, TV/SAT, TV/R/SAT outlets

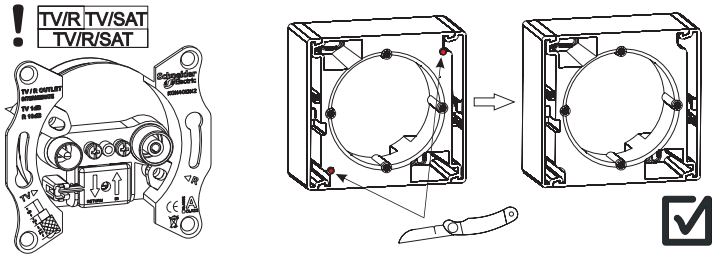

Technical information
Dimensions

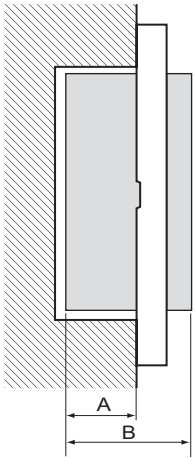

A: Embedding depth
B: Depth

Ref.	A (mm)	B (mm)
EPH01001xx	28	43
EPH01002xx	28	43
EPH01003xx	28	43
EPH02001xx	28	43
EPH02003xx	28	43
EPH03001xx	28	43
EPH03003xx	28	43
EPH04001xx	28	43
EPH04003xx	28	43
EPH04004xx	28	43
EPH05001xx	28	43
EPH05003xx	28	43
EPH06001xx	28	43
EPH06003xx	28	43
EPH07001xx	28	43
EPH08001xx	28	43
EPH08003xx	28	43
EPH09001xx	28	43
EPH11001xx	28	43
EPH11003xx	28	43
EPH13001xx	28	43
EPH13003xx	28	43

Ref.	A (mm)	B (mm)
EPH13005xx	28	43
EPH14001xx	28	43
EPH14003xx	28	43
EPH14303xx	28	43
EPH15001xx	28	43
EPH15003xx	28	43
EPH16001xx	28	43
EPH16003xx	28	43
EPH17001xx	28	43
EPH17003xx	28	43
EPH18001xx	28	43
EPH19003xx	28	43
EPH28001xx	32	42
EPH28002xx	32	42
EPH28003xx	32	48
EPH28004xx	32	42
EPH29001xx	32	42
EPH29002xx	32	42
EPH29005xx	32	42
EPH30001xx	32	42
EPH31001xx	32	47
EPH31003xx	32	42

Ref.	A (mm)	B (mm)
EPH32001xx	28	38
EPH32002xx	28	38
EPH32003xx	28	38
EPH33001xx	28	38
EPH33002xx	28	38
EPH33003xx	28	38
EPH34001xx	29	42
EPH34002xx	29	42
EPH34003xx	29	42
EPH34004xx	29	42
EPH3470121C	0	8
EPH35001xx	29	42
EPH35002xx	29	42
EPH35003xx	29	42
EPH36001xx	29	42
EPH37001xx	29	42
EPH37002xx	29	42
EPH41001xx	29	38
EPH42001xx	29	38
EPH43001xx	27	36
EPH44001xx	27	36
EPH4500121	27	36

Ref.	A (mm)	B (mm)
EPH4500171	27	36
EPH4600121	27	36
EPH4671121	27	36
EPH47001xx	27	36
EPH48001xx	27	36
EPH49001xx	27	36
EPH50001xx	39	48
EPH5370121	27	36
EPH56001xx	26	35
EPH57001xx	26	43
EPH62001xx	29	52
EPH63001xx	29	52
EPH680012x	29	48
EPH680112x	29	48
EPH97001xx	23	46
EPH97002xx	23	46
EPH98001xx	23	46
EPH98002xx	23	46
EPH99001xx	23	46

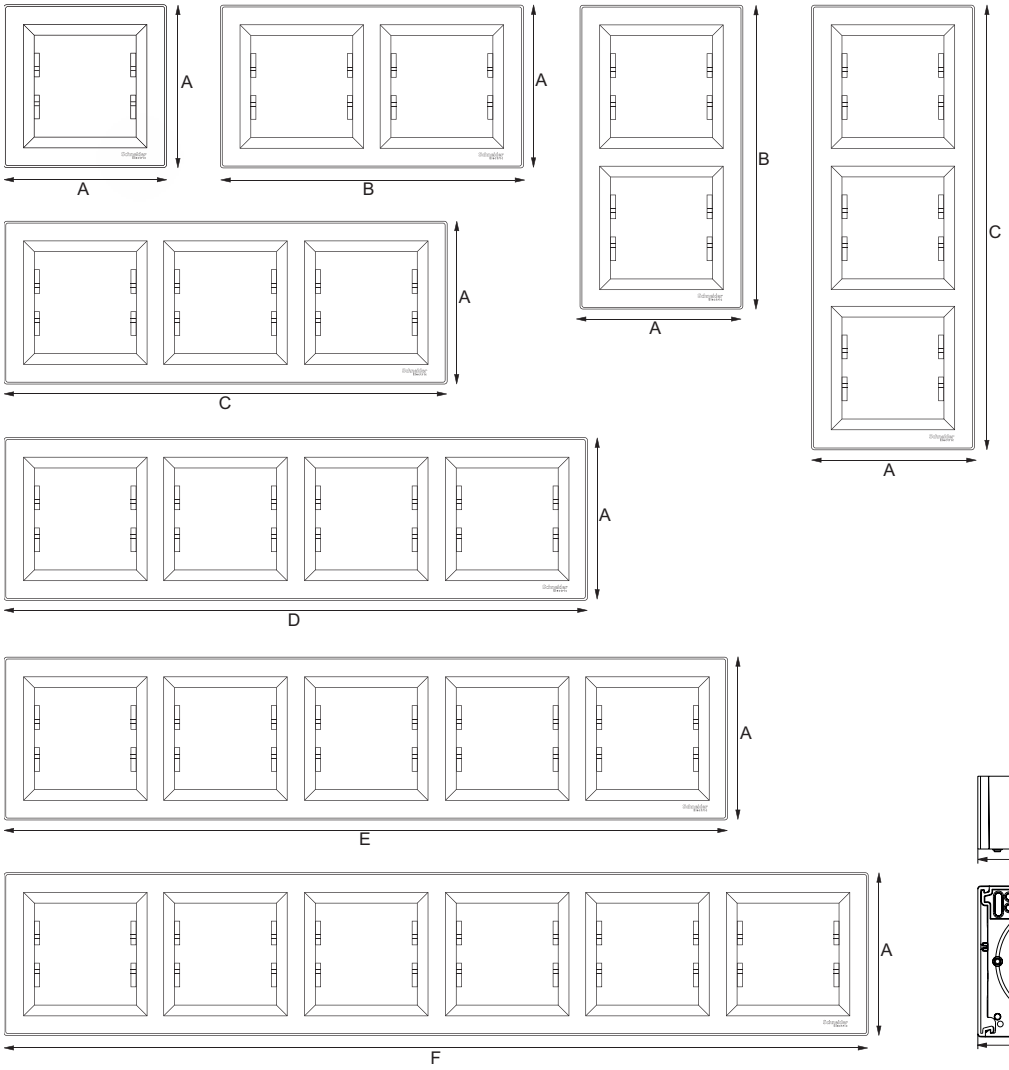

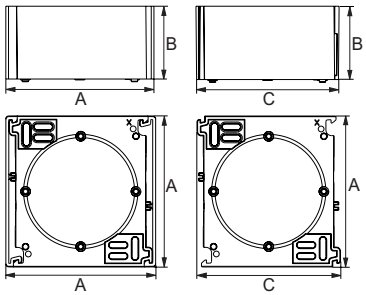

Horizontal and vertical frames (mm)

1 gang	2 gang	3 gang	4 gang	5 gang	6 gang
A	**B**	**C**	**D**	**E**	**F**
83	154	225	296	367	439

Surface-mounted boxes (mm)

1 gang		Extension		
A	**B**	**A**	**B**	**C**
82	40	82	40	78

Reference numbers

Overview

Ref.	Page
EPH0100121	10
EPH0100123	10
EPH0100161	10
EPH0100162	10
EPH0100169	10
EPH0100171	10
EPH0100221	10
EPH0100223	10
EPH0100261	10
EPH0100262	10
EPH0100271	10
EPH0100321	10
EPH0100323	10
EPH0100361	10
EPH0100362	10
EPH0100371	10
EPH0170121	10
EPH0170123	10
EPH0200121	10
EPH0200123	10
EPH0200169	10
EPH0200171	10
EPH0200321	10
EPH0270121	10
EPH0270123	10
EPH0300121	10
EPH0300123	10
EPH0300161	10
EPH0300162	10
EPH0300169	10
EPH0300171	10
EPH0300321	10
EPH0300323	10
EPH0300361	10
EPH0300362	10
EPH0300371	10
EPH0370121	10
EPH0370123	10
EPH0400121	10
EPH0400123	10
EPH0400161	10
EPH0400162	10
EPH0400169	10
EPH0400171	10
EPH0400321	10
EPH0400323	10
EPH0400361	10
EPH0400362	10
EPH0400371	10

Ref.	Page
EPH0400421	10
EPH0400423	10
EPH0400471	10
EPH0470121	10
EPH0470123	10
EPH0500121	10
EPH0500123	10
EPH0500161	10
EPH0500162	10
EPH0500169	10
EPH0500171	10
EPH0500321	10
EPH0500371	10
EPH0570121	10
EPH0570123	10
EPH0600121	10
EPH0600123	10
EPH0600161	10
EPH0600162	10
EPH0600169	10
EPH0600171	10
EPH0600321	10
EPH0600371	10
EPH0670121	10
EPH0670123	10
EPH0700121	12
EPH0700123	12
EPH0700161	12
EPH0700162	12
EPH0700169	12
EPH0700171	12
EPH0770121	12
EPH0770123	12
EPH0800121	12
EPH0800123	12
EPH0800161	12
EPH0800162	12
EPH0800169	12
EPH0800171	12
EPH0800321	12
EPH0800323	12
EPH0800362	12
EPH0800371	12
EPH0870121	12
EPH0870123	12
EPH0900121	12
EPH0900123	12
EPH0900162	12
EPH0900169	12

Ref.	Page
EPH0970121	12
EPH1100121	12
EPH1100123	12
EPH1100162	12
EPH1100169	12
EPH1100171	12
EPH1100321	12
EPH1170121	12
EPH1300121	13
EPH1300123	13
EPH1300161	13
EPH1300162	13
EPH1300169	13
EPH1300171	13
EPH1300321	13
EPH1300323	13
EPH1300361	13
EPH1300362	13
EPH1300369	13
EPH1300371	13
EPH1300521	11
EPH1300523	11
EPH1300561	11
EPH1300562	11
EPH1300569	11
EPH1300571	11
EPH1370121	13
EPH1370123	13
EPH1370521	11
EPH1370523	11
EPH1400121	11
EPH1400123	11
EPH1400161	11
EPH1400162	11
EPH1400171	11
EPH1400321	11
EPH1430321	11
EPH1470121	11
EPH1500121	11
EPH1500171	11
EPH1500321	11
EPH1570121	11
EPH1600121	13
EPH1600123	13
EPH1600161	13
EPH1600162	13
EPH1600169	13
EPH1600171	13
EPH1600321	13

Ref.	Page
EPH1601521	13
EPH1700121	13
EPH1700171	13
EPH1700321	13
EPH1800121	13
EPH1800171	13
EPH1900121	13
EPH2100121	10
EPH2100123	10
EPH2100161	10
EPH2100162	10
EPH2100169	10
EPH2100171	10
EPH2170121	10
EPH2170123	10
EPH2700421	19
EPH2700471	19
EPH2700521	19
EPH2700523	19
EPH2700561	19
EPH2700562	19
EPH2700569	19
EPH2700571	19
EPH2800121	14
EPH2800123	14
EPH2800161	14
EPH2800162	14
EPH2800169	14
EPH2800171	14
EPH2800221	14
EPH2800223	14
EPH2800261	14
EPH2800262	14
EPH2800269	14
EPH2800271	14
EPH2800321	14
EPH2800323	14
EPH2800362	14
EPH2800371	14
EPH2800421	14
EPH2800621	14
EPH2800662	14
EPH2800671	14
EPH2870121	14
EPH2870123	14
EPH2870442	14
EPH2900121	15
EPH2900123	15
EPH2900161	15

Reference numbers

Overview

Ref.	Page
EPH2900162	15
EPH2900169	15
EPH2900171	15
EPH2900221	15
EPH2900223	15
EPH2900261	15
EPH2900262	15
EPH2900269	15
EPH2900271	15
EPH2900521	15
EPH2900523	15
EPH2970121	15
EPH2970123	15
EPH2970221	15
EPH2970223	15
EPH3000121	14
EPH3000123	14
EPH3000161	14
EPH3000162	14
EPH3000169	14
EPH3000171	14
EPH3100121	15
EPH3100123	15
EPH3100161	15
EPH3100162	15
EPH3100169	15
EPH3100171	15
EPH3100321	15
EPH3100323	15
EPH3100361	15
EPH3100362	15
EPH3100369	15
EPH3100371	15
EPH3170121	15
EPH3170123	15
EPH3200121	16
EPH3200123	16
EPH3200161	16
EPH3200162	16
EPH3200169	16
EPH3200171	16
EPH3200221	16
EPH3200271	16
EPH3200321	16
EPH3200361	16
EPH3200371	16
EPH3270121	16
EPH3270123	16
EPH3270321	16
EPH3300121	16
EPH3300171	16
EPH3300221	16
EPH3300271	16
EPH3300721	16
EPH3400121	16
EPH3400161	16
EPH3400162	16
EPH3400171	16
EPH3400221	16
EPH3400321	16
EPH3400361	16
EPH3400362	16
EPH3400369	16
EPH3400371	16
EPH3400421	16
EPH3470121	16
EPH3470121C	18
EPH3470123	16
EPH3470321	16
EPH3500121	16
EPH3500161	16
EPH3500162	16
EPH3500169	16
EPH3500171	16
EPH3500221	16
EPH3500261	16
EPH3500271	16
EPH3600121	16
EPH3600169	16
EPH3600171	16
EPH3670121	16
EPH3700121	16
EPH3700123	16
EPH3700161	16
EPH3700162	16
EPH3700169	16
EPH3700171	16
EPH3700221	16
EPH3770121	16
EPH3770123	16
EPH4100121	17
EPH4100161	17
EPH4100162	17
EPH4100169	17
EPH4100171	17
EPH4170121	17
EPH4170123	17
EPH4200121	17
EPH4200162	17
EPH4200171	17
EPH4300121	17
EPH4300123	17
EPH4300161	17
EPH4300162	17
EPH4300169	17
EPH4300171	17
EPH4370121	17
EPH4400121	17
EPH4400123	17
EPH4400161	17
EPH4400162	17
EPH4400169	17
EPH4400171	17
EPH4470121	17
EPH4500121	17
EPH4500171	17
EPH4600121	18
EPH4671121	18
EPH4700121	17
EPH4700123	17
EPH4700161	17
EPH4700162	17
EPH4700169	17
EPH4700171	17
EPH4770121	17
EPH4770123	17
EPH4800121	17
EPH4800123	17
EPH4800162	17
EPH4800171	17
EPH4870121	17
EPH4900121	17
EPH5000121	17
EPH5000171	17
EPH5200123	17
EPH5200161	17
EPH5200162	17
EPH5200171	17
EPH5270121	17
EPH5270123	17
EPH5370121	18
EPH5500121	15
EPH5500123	15
EPH5500161	15
EPH5500162	15
EPH5500169	15
EPH5500171	15
EPH5600121	20
EPH5600123	20
EPH5600161	20
EPH5600162	20
EPH5600169	20
EPH5600171	20
EPH5670121	20
EPH5670123	20
EPH5700121	17
EPH5700161	17
EPH5700171	17
EPH5770121	17
EPH5800121	20
EPH5800123	20
EPH5800161	20
EPH5800162	20
EPH5800169	20
EPH5800171	20
EPH5800221	20
EPH5800223	20
EPH5800261	20
EPH5800262	20
EPH5800269	20
EPH5800271	20
EPH5800321	20
EPH5800323	20
EPH5800361	20
EPH5800362	20
EPH5800369	20
EPH5800371	20
EPH5800421	20
EPH5800423	20
EPH5800461	20
EPH5800462	20
EPH5800469	20
EPH5800471	20
EPH5800521	20
EPH5800523	20
EPH5800561	20
EPH5800562	20
EPH5800569	20
EPH5800571	20
EPH5800621	20
EPH5800623	20
EPH5800661	20
EPH5800662	20
EPH5800669	20
EPH5800671	20
EPH5810221	20

Reference numbers

Overview

Ref.	Page
EPH5810223	20
EPH5810261	20
EPH5810262	20
EPH5810269	20
EPH5810271	20
EPH5810321	20
EPH5810323	20
EPH5810361	20
EPH5810362	20
EPH5810369	20
EPH5810371	20
EPH6100121	20
EPH6100123	20
EPH6100161	20
EPH6100162	20
EPH6100169	20
EPH6100171	20
EPH6100221	20
EPH6100223	20
EPH6100262	20
EPH6100269	20
EPH6100271	20
EPH6200121	11
EPH6200123	11
EPH6200161	11
EPH6200162	11
EPH6200169	11
EPH6200171	11
EPH6270121	11
EPH6270123	11
EPH6800121	19
EPH6800123	19
EPH6800161	19
EPH6800162	19
EPH6800169	19
EPH6800171	19
EPH6801121	19
EPH6870121	19
EPH6870123	19
EPH9700121	14
EPH9700123	14
EPH9700221	14
EPH9800121	14
EPH9800123	14
EPH9800221	14
EPH9800271	14
EPH9810221	14
EPH9810223	14
EPH9810261	14

Ref.	Page
EPH9810262	14
EPH9810271	14
EPH9900121	15
EPH9900123	15
EPH9900161	15
EPH9900162	15
EPH9900169	15
EPH9900171	15

Environmental Data Program

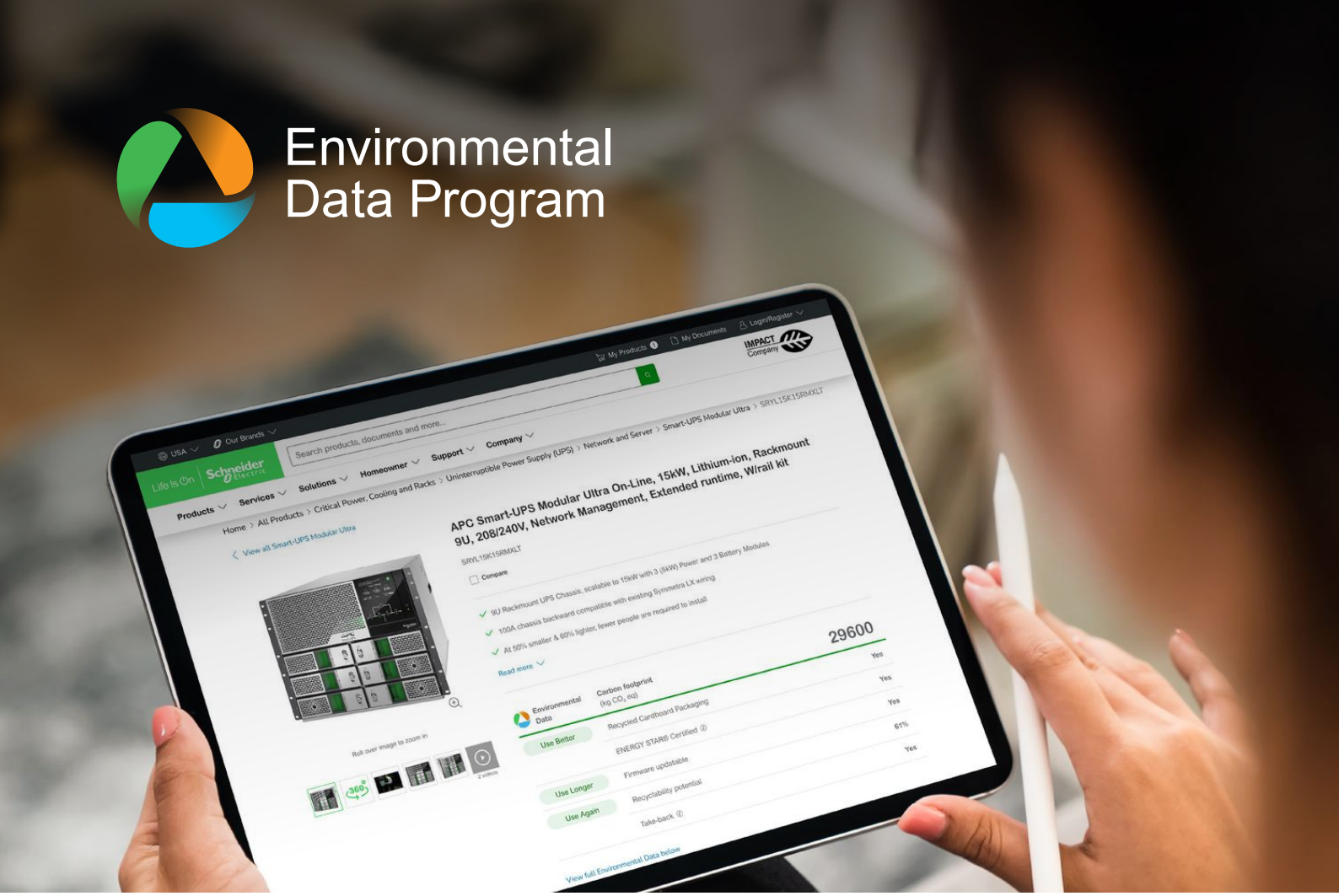

Next-level transparency for better-informed product choices

The Environmental Data Program is a framework for how we measure, categorize, and compare the environmental attributes and footprint of our products.

Using a rigorous, fact-based methodology, the program provides environmental data from across the product lifecycle.

Five data categories across the product lifecycle

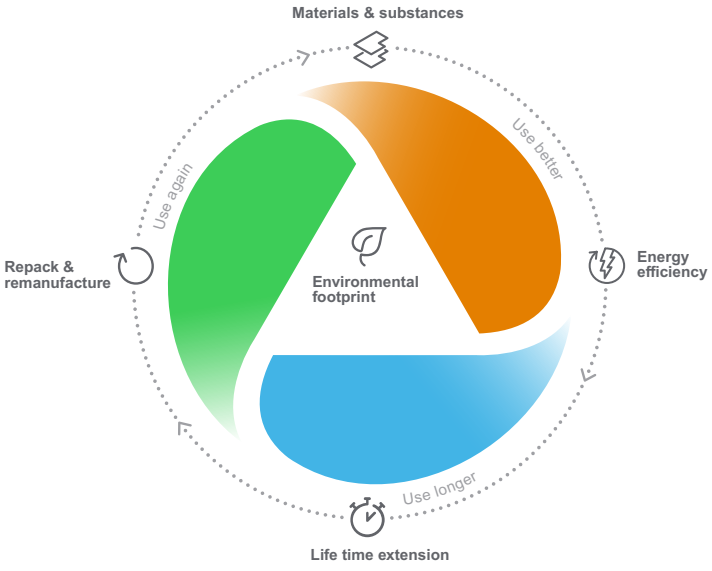

Use Better: How sustainable a product is, including environmental footprint, materials and substances, packaging, and energy efficiency.

Use Longer: How a product's life time can be effectively extended in terms of repairability and updatability.

Use Again: How a product can be reused, from dismantling and remanufacturing to recyclability and manufacturer take back.

With this transparent, verified data, customers and partners are empowered to make conscious environmental choices and accurately evaluate and report on sustainability performance.

All our hardware offers have an associated environmental data available on se.com product pages.

Learn more about the Environmental Data Program

Schneider Electric Industries SAS

35, rue Joseph Monier
CS 30323
92506 Rueil Malmaison Cedex
France

RCS Nanterre 954 503 439
Capital social 928 298 512 €
www.se.com

03-2026

© 2026 - Schneider Electric. All Rights Reserved.
All trademarks are owned by Schneider Electric Industries SAS or its affiliated companies.
Document reference: LSB02658EN

This document has been
printed on recycled paper

LED Zona®
ОСВЕТИТЕЛНИ РЕШЕНИЯ

Харесахте ли нещо от каталога?

Разгледайте и поръчайте продукти на Schneider Electric онлайн
на led-zona.bg – с актуални цени и наличности.

Продуктите на Schneider Electric

Сканирайте или кликнете

Разгледайте продуктите →

Каталози на Schneider Electric

Сканирайте или кликнете

Още каталози →

www.led-zona.bg

T: 0888 065 970 | E: sales@led-zona.bg

Сфера Лайт ООД · гр. София, ж.к. Банишора, ул. Опълченска, бл. 54 (до 7-ма поликлиника)