2025

PONTLIGHT



ACOUSTIC

CATALOGUE | SOLUTIONS | DESIGN | MATERIALS | COLORS

PONTLIGHT

DESIGNED WITH YOU

PONTLIGHT

Introduction

About the company

Pont Light specializes in aluminum profile luminaires with cutting-edge LED technology. Our diverse product portfolio offers innovative lighting solutions for designers and architects. This catalogue was created to help inspire new ideas. Pont Light provides custom-made lighting solutions for retail, hotels, offices, and residential spaces, blending functionality with aesthetic appeal.


OURIA

About the Catalogue

Pont's product range has been expanded with so many acoustic luminaires that they deserve to be featured in their own dedicated catalogue. This is how this acoustic catalogue was born. We have carefully designed the new product line. In the catalogue, key parameters and benefits of acoustic materials are showcased, helping you find exactly what meets your needs.





Lighting design meets Acoustic solutions

We are trying to make lighting more and more interesting. Acoustic materials are essential as wall panels, partitions, and also as ceiling elements. Why not combine this sound-absorbing function with lighting? Join us on a journey into the world of luminaires integrated into acoustic materials!

Discover new shapes, explore vibrant colors!

TABLE OF CONTENT

01

4 Introduction

6 About the Catalogue

02

10 Acoustic Materials

14 Pluffy Material & Colors

16 Feltly Material & Colors

03

18 Luminaires Overview

21 Pluffy Acoustic Luminaires

125 Feltly Acoustic Luminaires

ACOUSTIC



Pluffy

MATERIALS



Feltly

Acoustic Materials

Acoustic materials are specialized products designed to absorb, or redirect sound waves, effectively reducing noise levels and enhancing sound quality in interiors.

Pluffy



Feltly

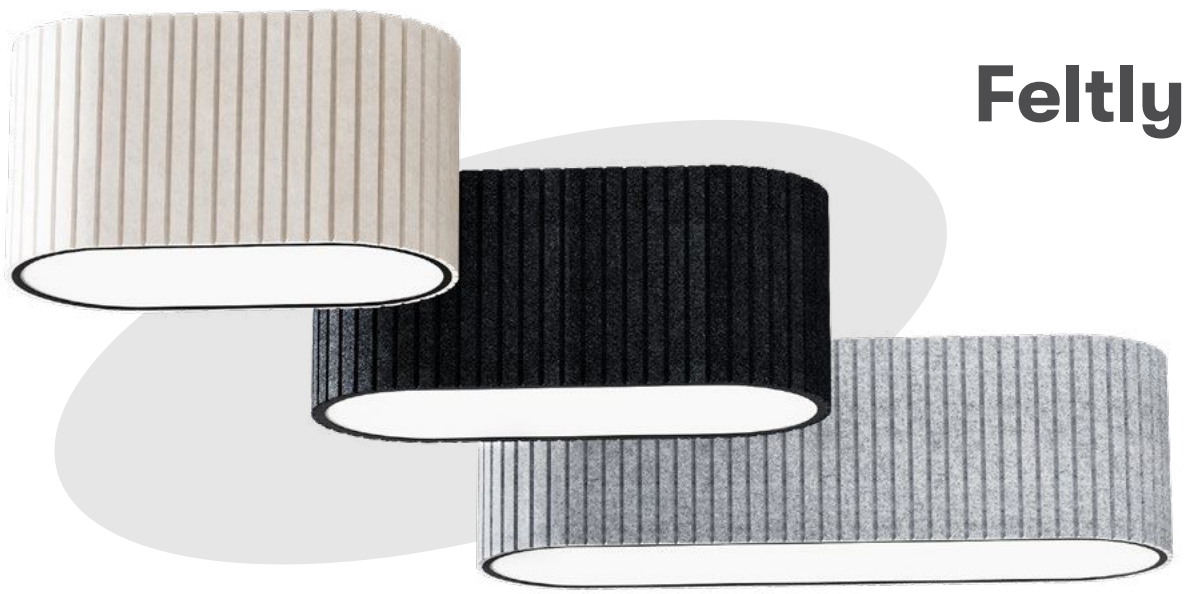



Pluffy Material

Pluffy-Felt: Puffy & Fluffy

Pluffy is a special porous material that can be formed into 3-dimensional shapes

...which makes it puffy & fluffy.
Excellent sound-absorbing and thermal insulation properties.

CERTIFICATES

High Acoustic performance (EN-11654) up to class A

Flame resistant
US: ASTM 84 A Class
EU: B-s1,d0 (EN 13501-1)

Does Not Hold Moisture

Easy to Clean

60% Recyled rPET content, 100% Recyclable

99.9% Antibacterial test (ISO-20743:2013)

Light fastness 4+ (ISO-105 B02)

Durable

Low VOC, Emission free, Odorless

Non-Toxic
No Chemicals

Thermal insulation
0,035 W/mK

Fibre Composition
ISO 1833 - 100,0 % Polyester

Bleach Cleanable Color Fastness To Pool Water;
ISO 105 E03:2010
Color Change: 4-5 (Slightly Change - NoChange)

Moisture Resistance & UV Exposure

Suspended Ceilings - Requirements And Test Methods. EN 13964 : 2014 - “B” Class PASSED

Plastics Artificial radiation or weathering in devices -
Part 3: UV fluorescent lamps. EN 4892-3: 2016 - PASSED

Air Permeability
ISO 9237: 1995 - 584.8 l/m2/sec

Pluffy Colors

Base Colors


Black
BLC2094

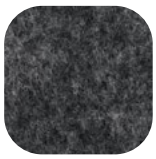
Dark Grey
DGR2093

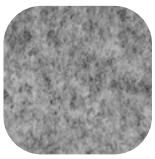
Grey
GRY2092

Pearl White
PRW1091


Beige
BEG1012

Natural Colors


Light Oak
LOA2101


Dark Oak
DOA2102


Sand
SND1013


Coco Brown
CCB2082


Moss Green
MSG2062

Vivid Colors


Garnet Red
GR2033


Sunset Orange
SRG1021


Pink Lemonade
PKL2031


Granite Blue
GRB2052


Deep Blue
DPB2055


Forest Green
FRG2064


Burgundy
BGY2034


Aqua Turquise
AQT2066

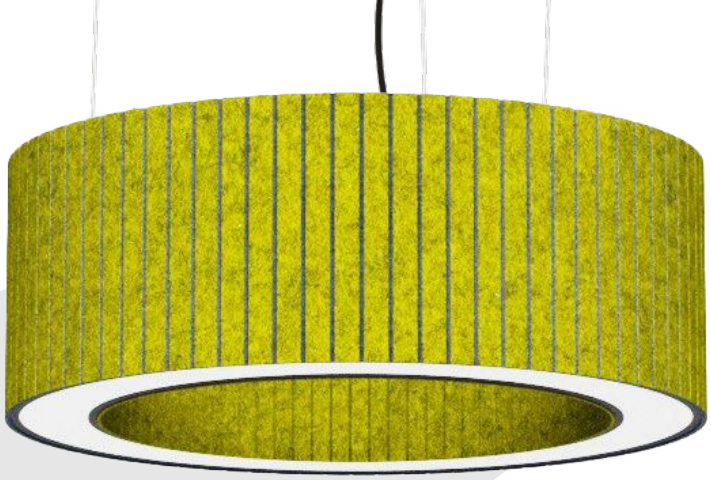

Feltly Material

Feltly offers enhanced sound absorption.
Their modern design, featuring V-Cut technology gives you the freedom to make acoustic luminaires as unique as can be.

CERTIFICATES

High Acoustic performance (EN-11654) up to class A

Eco-Friendly

Easy to clean with a damp cloth or vacuum cleaner

Long lasting moulded and resistant to impact, moisture and humidity

Fire Reterdant and self-extinguishing (EN-13501) B,S1,d0

%99.9 Antibacterial structure (ISO-20743)

Light fastness grade 6+ (ISO-105 B02)

Designed for easy assembly and installation

Low VOC, formaldehyde-free (ISO-14184)

Non-Toxic
No Chemicals

Superior thermal insulating
0,040 W/mK

Compared to alternative materials; extremely lightweight, apx.1,5kg / M2

Feltly Colors

Natural Colors

Thickness: 6 mm or 12 mm



Graphite Black
PLN03



Space Grey
PLN01

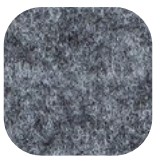

Middle Grey
PLN04



Light Grey
PLN02



Moon Beige
PLN06

Color Selection

Thickness: 7 mm or 13 mm



Amaranth
PLC22



Terra Cotta
PLC23



Pumpkin
PLC25



Bell
PLC17



Lemon
PLC18



Queen Blue
PLC05



Sea
PLC10



Steel Blue
PLC12



Oxley
PLC13



Leaf
PLC16

Acoustic Luminaires

Pluffy Family

powered by ACOUST-IT



Rotund Ring
23



Rotund Ring Dark
29



Rotund Eye
35



Rotund Disk
41



Rotund Wall
47



Oblong
53



Cloud Single
59



Cloud Double
61



Cloud Single Dark
65



Cloud Double Dark
67



Noem
71



Noem Linear
77



Tondo Free Stand
83



Tondo Pendant
69



Tondo Desk
95



Roda
101



Furry
107



Ilona Acoustic
113



Ilona Dark Acoustic
119

Feltly Family



Yula
127



Parasol
133



Lara
139



Olive
145

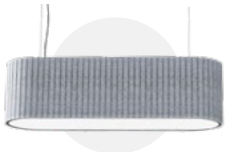

Livia
151



Riva
157



Riva Slim
163



Aneta Acoustic
169

PLUFFY ACOUSTIC

Luminaires with Pluffy Material





ROTUND RING



ROTUND RING

GENERAL INFORMATIONS

Body Parameters

MATERIALS

Aluminum luminaire body / Opal diffuser / Pluffy Acoustic material.

MOUNTING

Multi-Point or Single-Point suspended luminaire.

Light Parameters

LIGHT SOURCE

LED, Opal diffuser, Direct only.
CRI>80 or CRI>90.

CONTROL

External driver. ON/OFF, DALI, PushDim, Bluetooth.

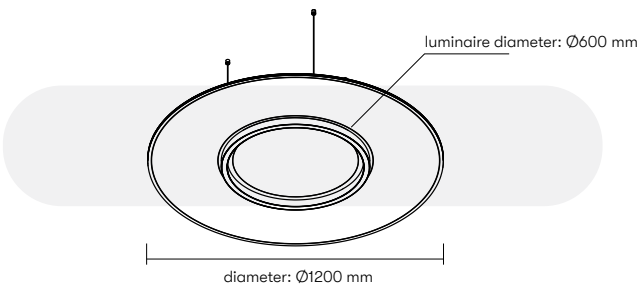

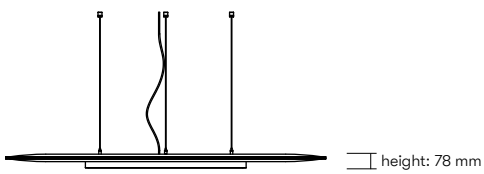

ROTUND RING

HEIGHT
- 78 mm

DIAMETER
- ACOUSTIC: Ø1200 mm
- LUMINAIRE: Ø600 mm

39 W / 2370 lm

DIFFUSER
- M microprismatic
- S standard (opal)
- L lenses

COLOR TEMPERATURE
- 2 2700 K
- 3 3000 K
- 4 4000 K
- 1 RGBW
- 5 Tunable White

CE 220V 240V LEDs 50/60Hz

Lumen values are calculated at 4000K.

ROTUND RING

DIAMETER ● Ø1200 MM

COLOR **DGR2093** DARK GREY

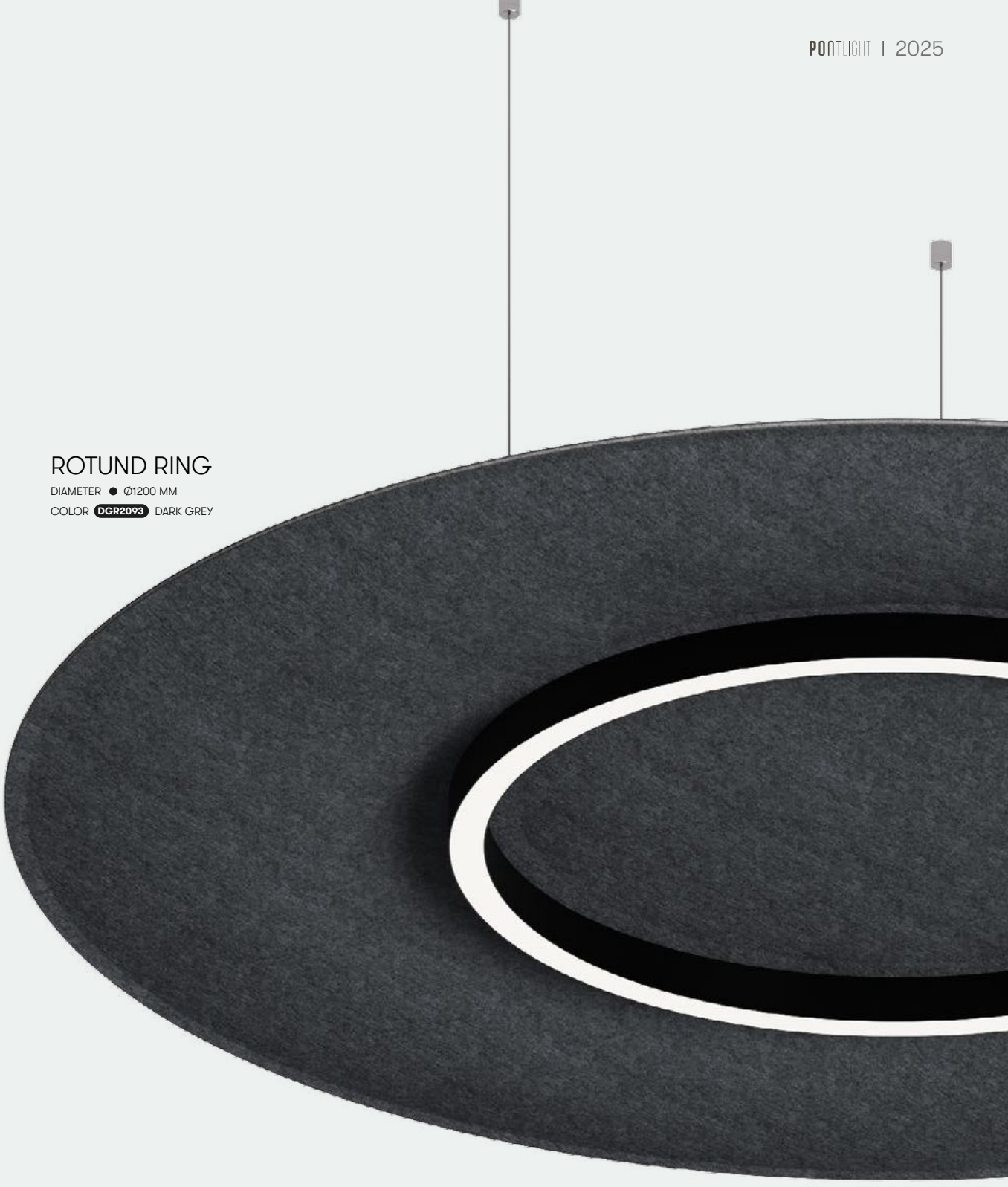

ROTUND RING
SPECIFIC DATA

ACOUSTIC PARAMETERS

Material:	PET Felt, 60% recycled from plastic bottles
Weight:	apx. 1500 g/m²
Thickness:	Max. 45mm (+/- 2mm). Min. 6mm (+/- 2mm).
Flammability:	US: ASTM 84 A Class EU: EN 13501 / Result 'B-s1,d0'
Light fastness grade:	ISO 105 B02:1994 / Result '4+'
Maintenance:	Indoor use only. Cleaning methods: Vacuum regularly. Wipe clean with a damp cloth. Professionally dry clean. Bleach cleanable (only natural colors).

More information about Pluffy Material on catalogue page 14.


Diffusion


Absorption


Attenuation


Low Tone


Mid Tone


High Tone

PLUFFY ACOUSTIC COLORS
(See on page 15)



BODY COLORS



Black | Grey | Anthracite | White | RAL | Special Colors

LIGHTING TYPES

Direct-only | Direct-Indirect | Indirect-only

MOUNTING TYPES
with external driver

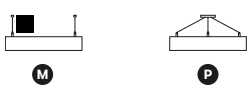

Multi-Point Pendant | Single-Point Pendant

ROTUND RING

DIAMETER ● Ø1200 MM

COLOR **BEG1012** BEIGE

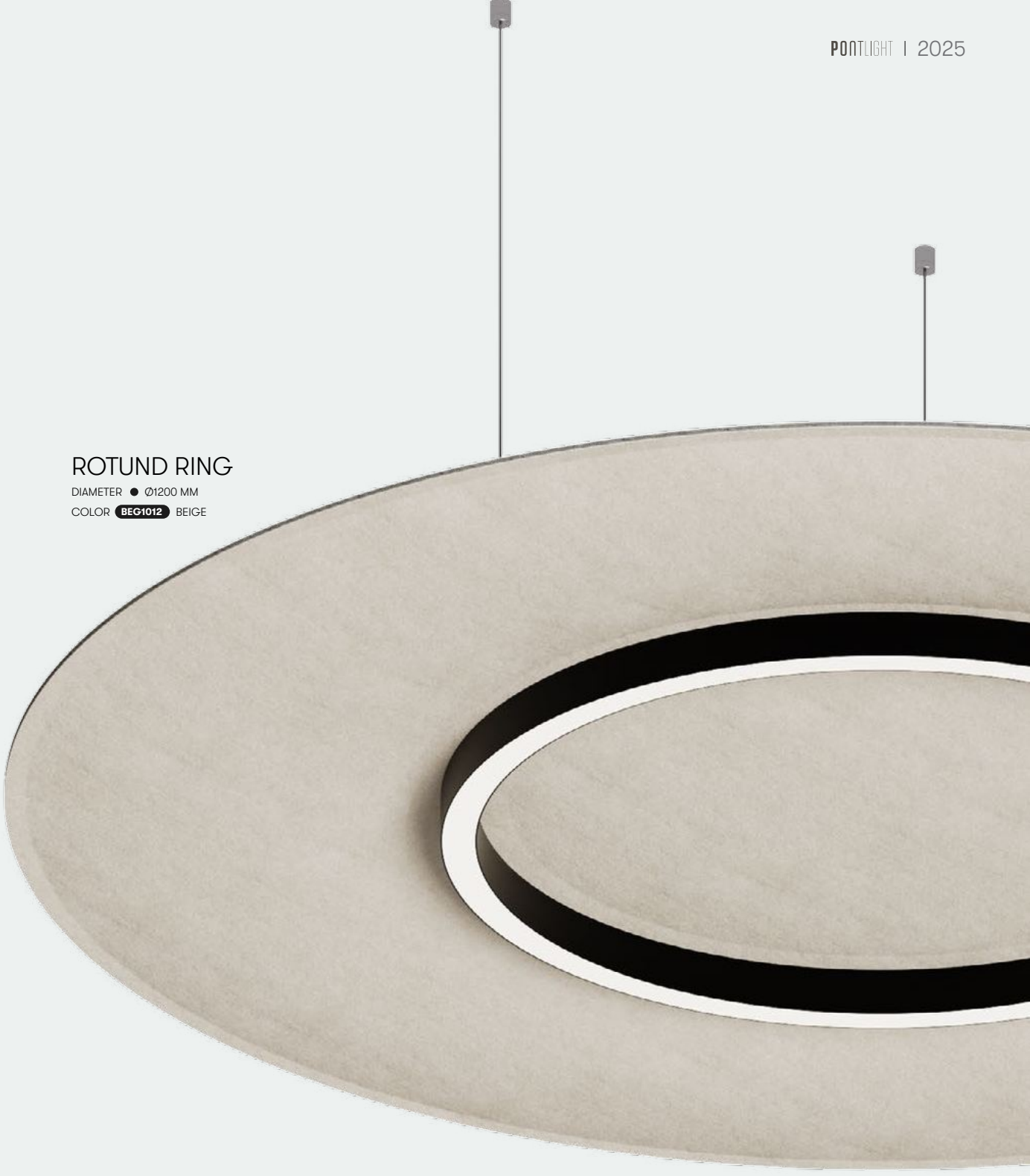





ROTUND RING DARK



ROTUND RING DARK

GENERAL INFORMATIONS

Body Parameters

MATERIALS

Aluminum luminaire body / Microcell diffuser / Pluffy Acoustic material.

MOUNTING

Multi-Point or Single-Point suspended luminaire.

Light Parameters

LIGHT SOURCE

LED, Diffuser with lenses, Direct only. CRI>80 or CRI>90.

CONTROL

External driver. ON/OFF, DALI, PushDim, Bluetooth.

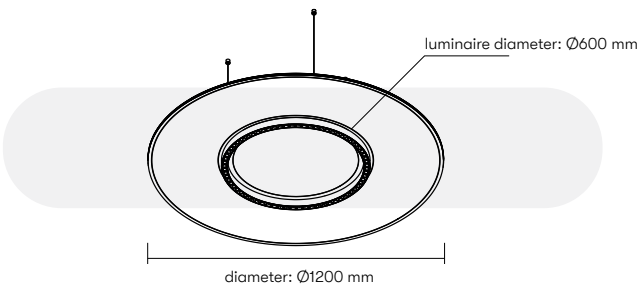

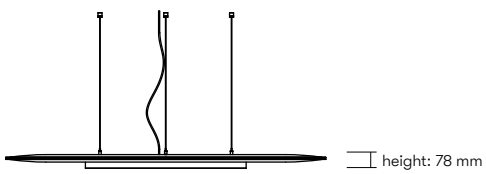

ROTUND RING DARK

HEIGHT
- 78 mm

DIAMETER
- ACOUSTIC: Ø1200 mm
- LUMINAIRE: Ø600 mm

27 W / 2700 lm

DIFFUSER
- M microprismatic
- S standard (opal)
- **L** lenses

COLOR TEMPERATURE
- 2 2700 K
- **3** 3000 K
- **4** 4000 K
- 1 RGBW
- 5 Tunable White

CE 220V 240V LEDs 50/60Hz

Lumen values are calculated at 4000K.

ROTUND RING DARK

DIAMETER ● Ø1200 MM

COLOR **DGR2093** DARK GREY

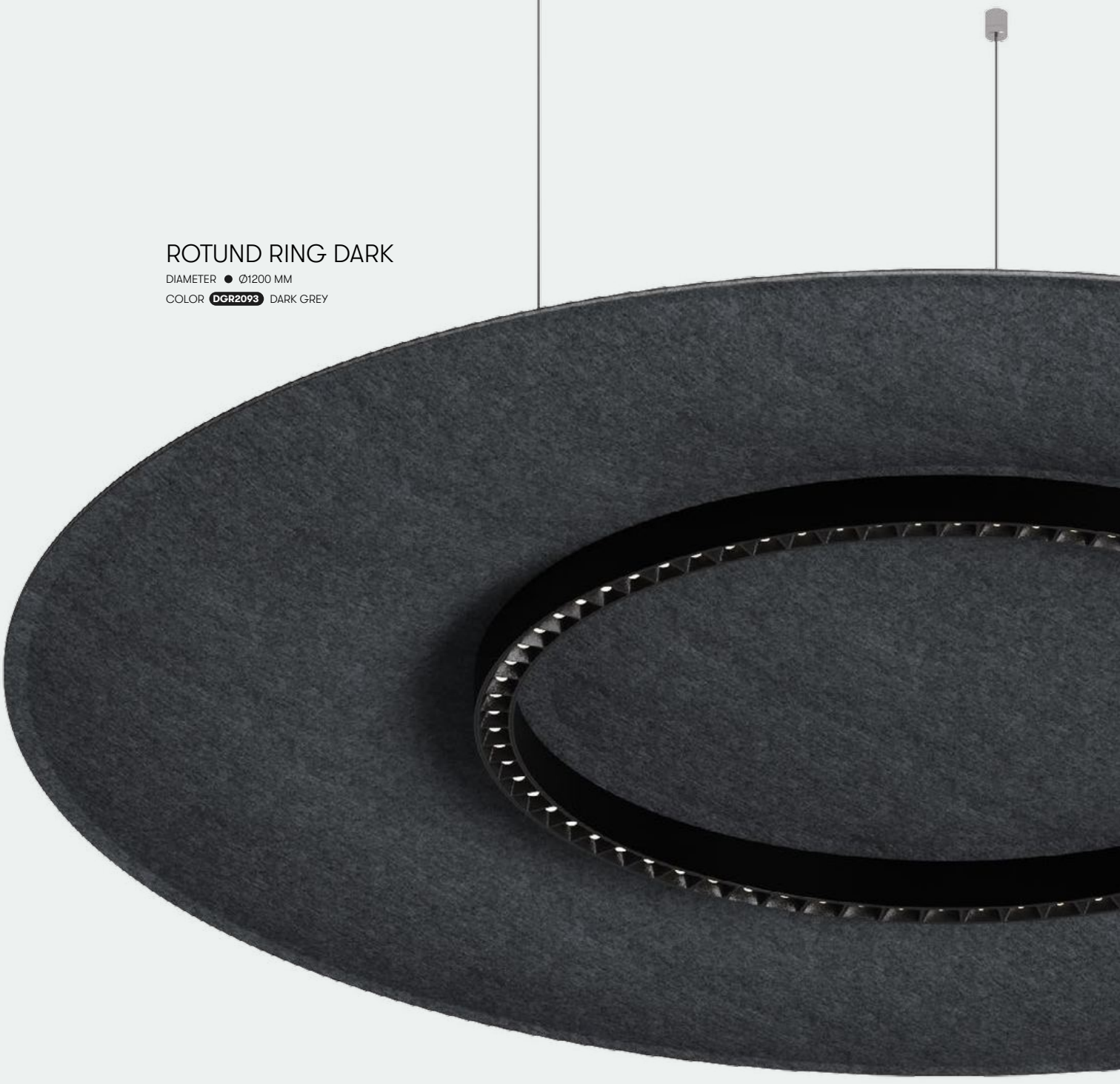

ROTUND RING DARK
SPECIFIC DATA

ACOUSTIC PARAMETERS

Material:	PET Felt, 60% recycled from plastic bottles
Weight:	apx. 1500 g/m²
Thickness:	Max. 45mm (+/- 2mm). Min. 6mm (+/- 2mm).
Flammability:	US: ASTM 84 A Class EU: EN 13501 / Result 'B-s1,d0'
Light fastness grade:	ISO 105 B02:1994 / Result '4+'
Maintenance:	Indoor use only. Cleaning methods: Vacuum regularly. Wipe clean with a damp cloth. Professionally dry clean. Bleach cleanable (only natural colors).

More information about Pluffy Material on catalogue page 14.


Diffusion


Absorption


Attenuation


Low Tone


Mid Tone


High Tone

PLUFFY ACOUSTIC COLORS
(See on page 15)



BODY COLORS

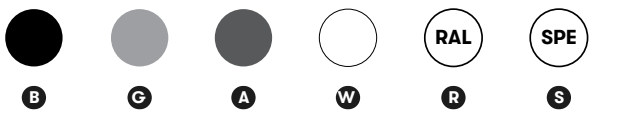

Black | Grey | Anthracite | White | RAL | Special Colors

LIGHTING TYPES



Direct-only | Direct-Indirect | Indirect-only

MOUNTING TYPES
with external driver



Multi-Point Pendant | Single-Point Pendant

ROTUND RING DARK

DIAMETER ● Ø1200 MM

COLOR **BEG1012** BEIGE

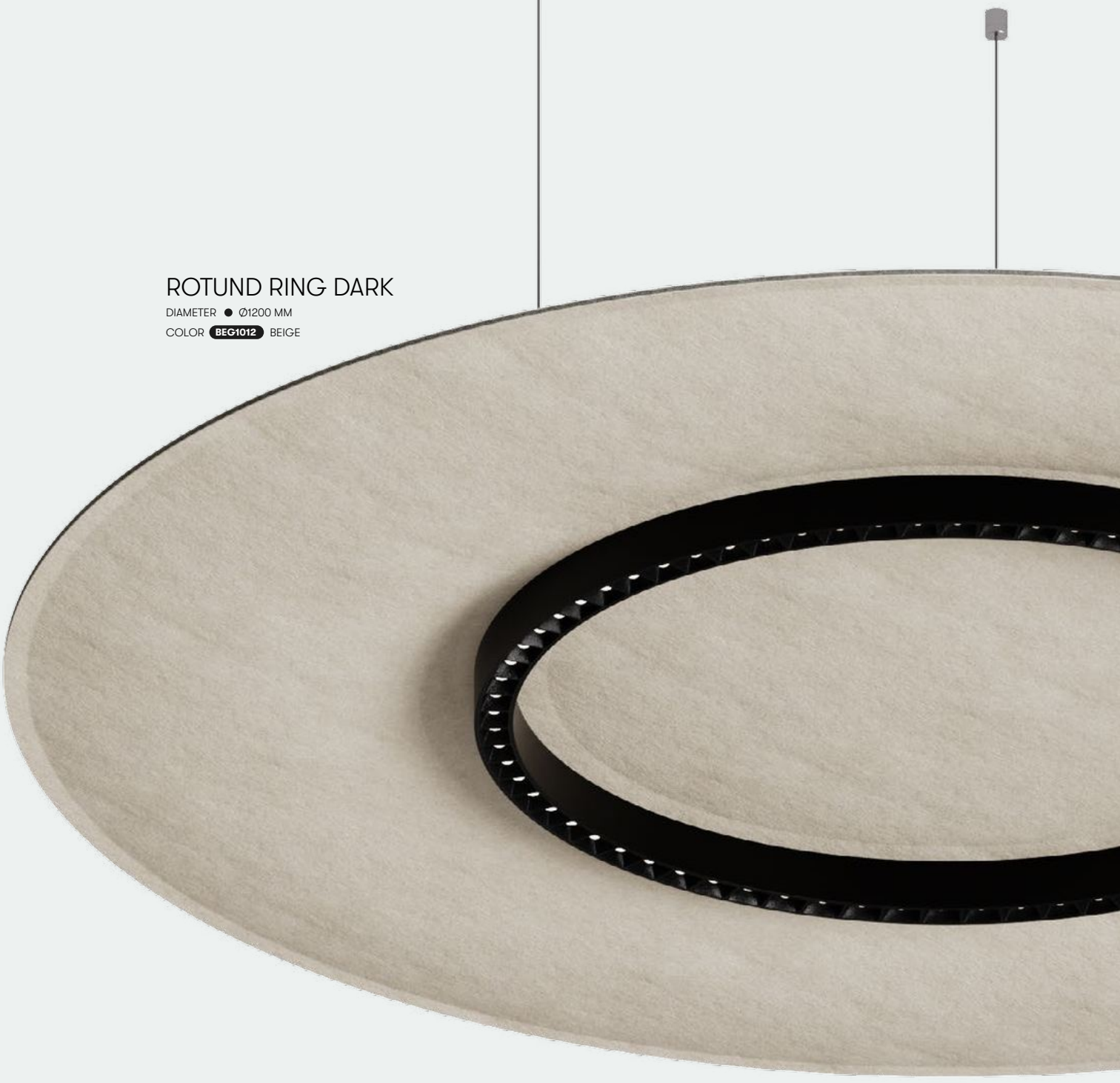





ROTUND EYE

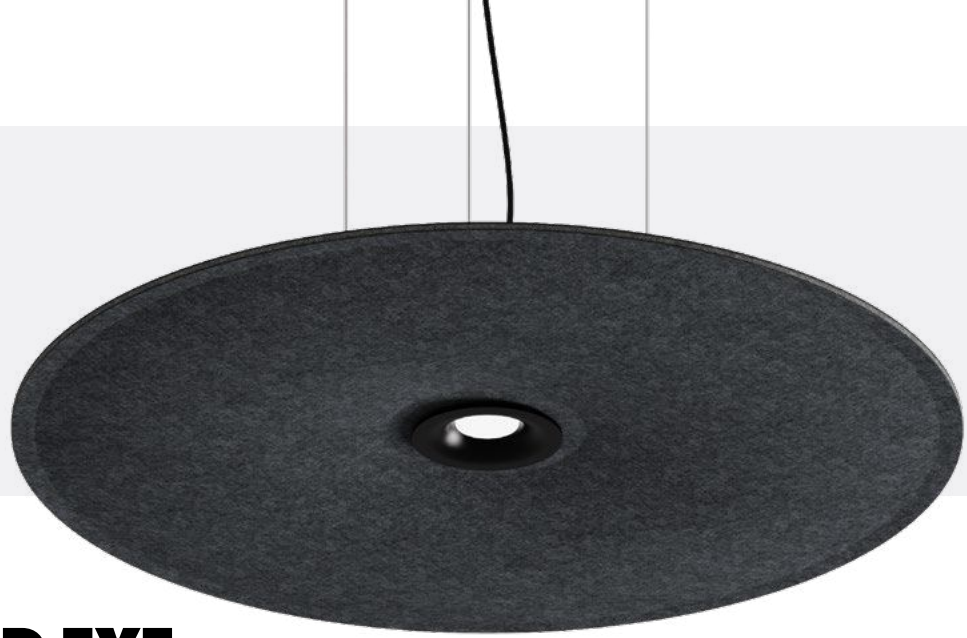

ROTUND EYE

GENERAL INFORMATIONS

Body Parameters

MATERIALS

Aluminum luminaire body / Lenses / Pluffy Acoustic material.

MOUNTING

Multi-Point or Single-Point suspended luminaire.

Light Parameters

LIGHT SOURCE

LED, Spotlight, Direct only. CRI>80 or CRI>90.

CONTROL

External driver. ON/OFF, DALI, PushDim, Bluetooth.

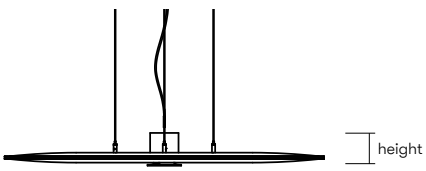

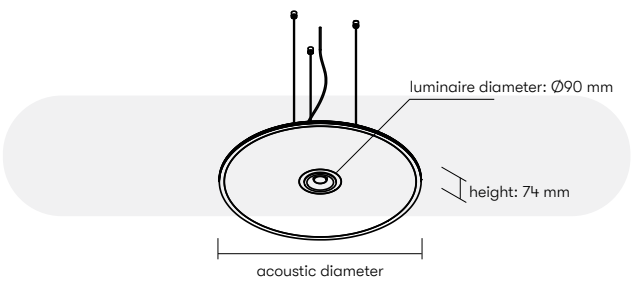

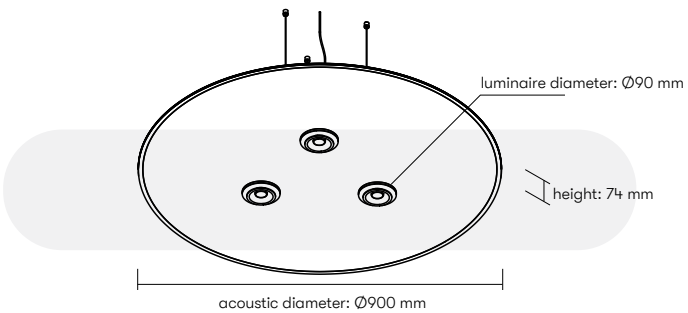

ROTUND EYE

HEIGHT
- 74 mm

DIAMETER

	●	●
ACOUSTIC:	Ø600 mm	Ø900 mm
LUMINAIRE:	Ø90 mm	Ø90 mm
	8 W / 850 lm	**8 W / 850 lm**

DIFFUSER
- M microprismatic
- S standard (opal)
- L lenses

COLOR TEMPERATURE
- 2 2700 K
- 3 3000 K
- 4 4000 K
- 1 RGBW
- 5 Tunable White

ROTUND EYE **TRIPLE**

HEIGHT
- 74 mm

DIAMETER

	●
ACOUSTIC:	Ø900 mm
LUMINAIRE:	Ø90 mm
	24 W / 2550 lm

DIFFUSER
- M microprismatic
- S standard (opal)
- L lenses

COLOR TEMPERATURE
- 2 2700 K
- 3 3000 K
- 4 4000 K
- 1 RGBW
- 5 Tunable White

CE 220V 240V LEDs 50/60Hz

Lumen values are calculated at 4000K.



ROTUND EYE

DIAMETER ● Ø600 MM
COLOR **DGR2093** DARK GREY

ROTUND EYE **TRIPLE**

DIAMETER ● Ø900 MM
COLOR **DGR2093** DARK GREY

ROTUND EYE
SPECIFIC DATA

ACOUSTIC PARAMETERS

Material:	PET Felt, 60% recycled from plastic bottles
Weight:	apx. 1500 g/m²
Thickness by diameter:	Ø600 mm: Max. 30mm, min. 6mm. (+/- 2mm) Ø900 mm: Max. 40mm, min. 6mm. (+/- 2mm)
Flammability:	US: ASTM 84 A Class EU: EN 13501 / Result 'B-s1,d0'
Light fastness grade:	ISO 105 B02:1994 / Result '4+'
Maintenance:	Indoor use only. Cleaning methods: Vacuum regularly. Wipe clean with a damp cloth. Professionally dry clean. Bleach cleanable (only natural colors).

More information about Pluffy Material on catalogue page 14.


Diffusion


Absorption


Attenuation


Low Tone


Mid Tone


High Tone

PLUFFY ACOUSTIC COLORS
(See on page 15)



BODY COLORS



Black | Grey | Anthracite | White | RAL | Special Colors

LIGHTING TYPES

Direct-only | Direct-Indirect | Indirect-only

MOUNTING TYPES
with external driver



Multi-Point Pendant | Single-Point Pendant



ROTUND EYE

DIAMETER ● Ø600 MM
COLOR **BEG1012** BEIGE

ROTUND EYE **TRIPLE**

DIAMETER ● Ø900 MM
COLOR **BEG1012** BEIGE



ROTUND DISK



ROTUND DISK

GENERAL INFORMATIONS

Body Parameters

MATERIALS

Aluminum luminaire body / Opal, microprismatic diffuser / Pluffy Acoustic material.

MOUNTING

Multi-Point or Single-Point suspended luminaire.

Light Parameters

LIGHT SOURCE

LED, Opal or microprismatic diffuser, Direct only, Direct-Indirect or Indirect only. CRI>80 or CRI>90.

CONTROL

External driver. ON/OFF, DALI, PushDim, Bluetooth.

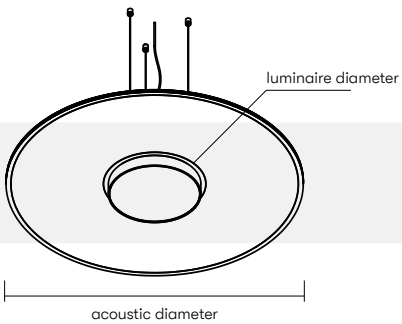

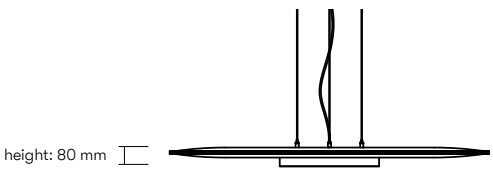

ROTUND DISK

HEIGHT	DIAMETER			
● 80 mm		●	●	●
	ACOUSTIC:	Ø600 mm	Ø900 mm	Ø1200 mm
	LUMINAIRE:	Ø220 mm	Ø280 mm	Ø380 mm
		18 W / 1980 lm	**23 W / 2530 lm**	**36 W / 3960 lm**

DIFFUSER

- M microprismatic
- S standard (opal)
- L lenses

COLOR TEMPERATURE

- 2 2700 K
- 3 3000 K
- 4 4000 K
- 1 RGBW
- 5 Tunable White

CE 220V 240V LEDs 50/60Hz

Lumen values are calculated at 4000K.



ROTUND DISK

DIAMETER ● Ø900 MM

COLOR **DGR2093** DARK GREY

ROTUND DISK
SPECIFIC DATA

ACOUSTIC PARAMETERS

Material:	PET Felt, 60% recycled from plastic bottles
Weight:	apx. 1500 g/m²
Thickness by diameter:	Ø600 mm: Max. 30mm, min. 6mm. (+/- 2mm)
	Ø900 mm: Max. 40mm, min. 6mm. (+/- 2mm)
	Ø1200 mm: Max. 45mm, min. 6mm. (+/- 2mm)
Flammability:	US: ASTM 84 A Class
	EU: EN 13501 / Result 'B-s1,d0'
Light fastness grade:	ISO 105 B02:1994 / Result '4+'
Maintenance:	Indoor use only. Cleaning methods: Vacuum regularly. Wipe clean with a damp cloth. Professionally dry clean. Bleach cleanable (only natural colors).

More information about Pluffy Material on catalogue page 14.

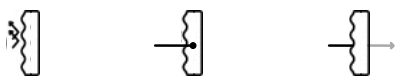

Diffusion | Absorption | Attenuation



Low Tone | Mid Tone | High Tone

PLUFFY ACOUSTIC COLORS

(See on page 15)



BODY COLORS



Black | Grey | Anthracite | White | RAL | Special Colors

LIGHTING TYPES

1 Direct-only | 2 Direct-Indirect | 3 Indirect-only

MOUNTING TYPES

with external driver

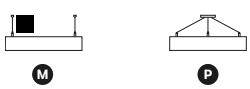

M Multi-Point Pendant | P Single-Point Pendant

ROTUND DISK

DIAMETER ● Ø900 MM

COLOR **BEG1012** BEIGE

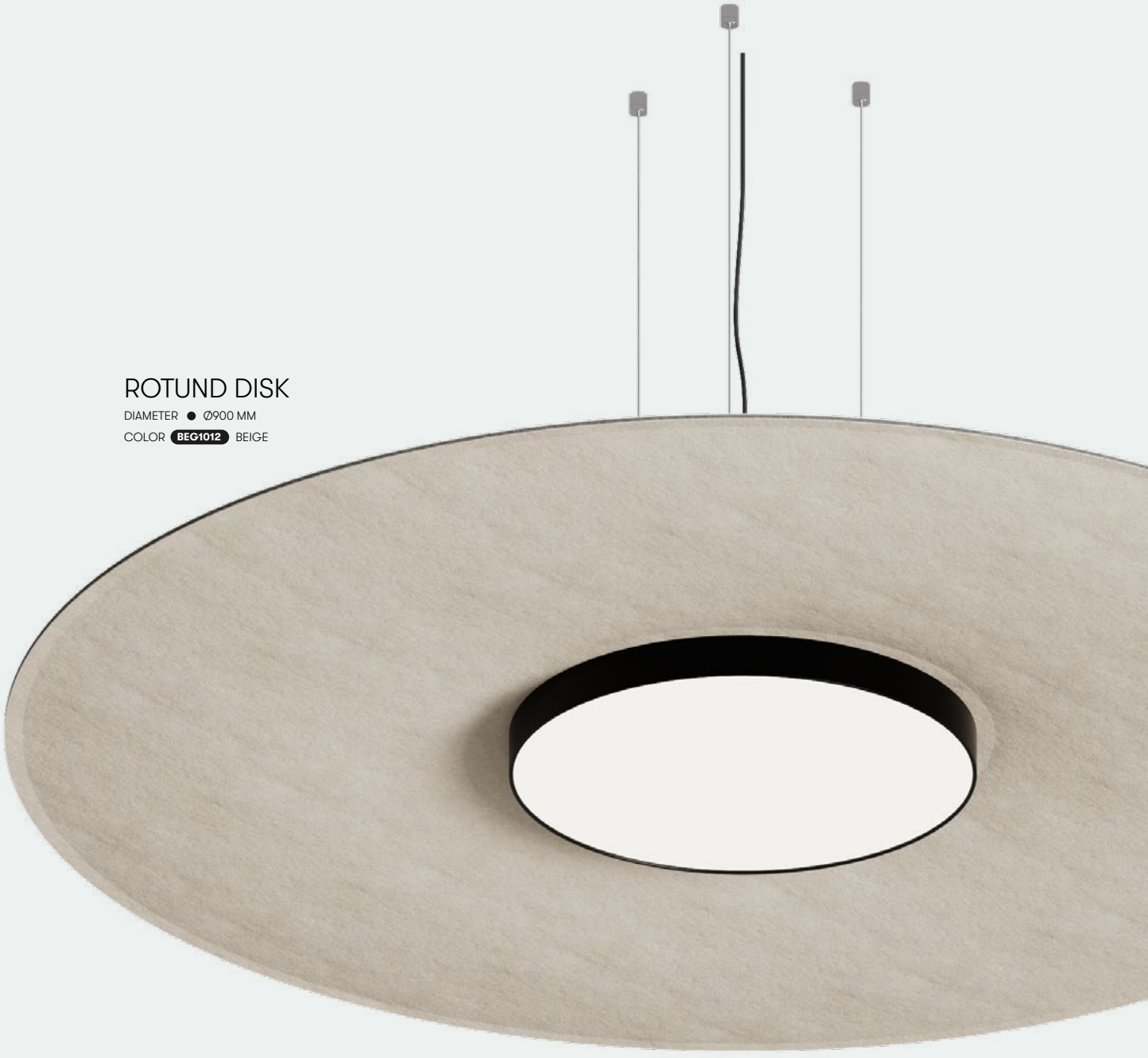



ROTUND WALL



ROTUND WALL

GENERAL INFORMATIONS

Body Parameters

MATERIALS

Aluminum luminaire body / Opal diffuser / Pluffy Acoustic material.

MOUNTING

Wall-mounted luminaire with spacers.

Light Parameters

LIGHT SOURCE

LED, Opal diffuser, Indirect only.
CRI>80 or CRI>90.

CONTROL

External driver. ON/OFF, DALI, PushDim, Bluetooth.

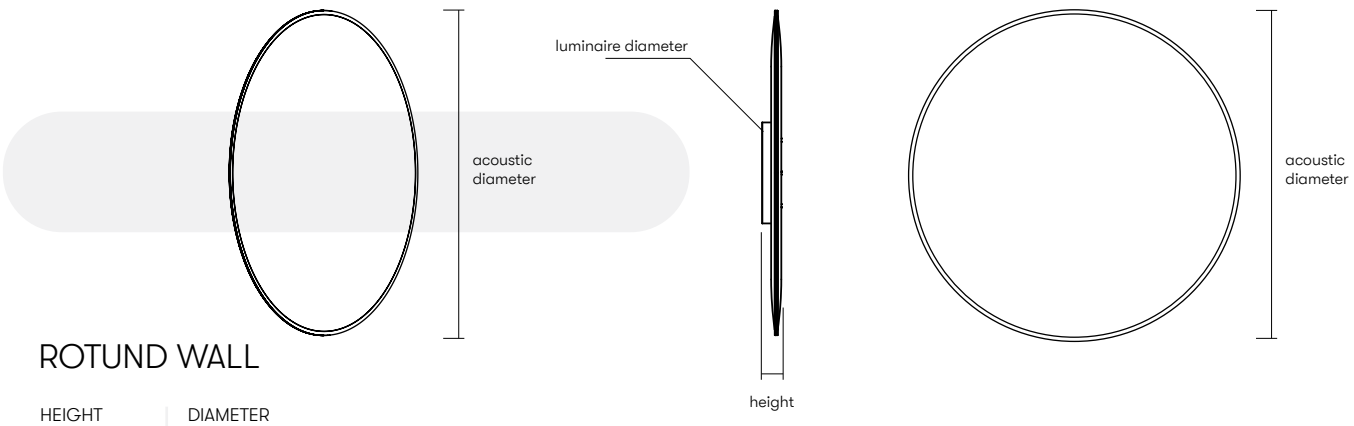

ROTUND WALL

HEIGHT
- 77 mm

DIAMETER

	●	●
ACOUSTIC:	Ø600 mm	Ø1200 mm
LUMINAIRE:	Ø400 mm	Ø1000 mm
	18 W / 1440 lm	**28 W / 2240 lm**

DIFFUSER
- M microprismatic
- S standard (opal)
- L lenses

COLOR TEMPERATURE
- 2 2700 K
- 3 3000 K
- 4 4000 K
- 1 RGBW
- 5 Tunable White

CE 220V 240V LEDs 50/60Hz

Lumen values are calculated at 4000K.

ROTUND WALL

DIAMETER ● Ø1200 MM

COLOR **BEG1012** BEIGE



ROTUND WALL
SPECIFIC DATA

ACOUSTIC PARAMETERS

Material:	PET Felt, 60% recycled from plastic bottles
Weight:	apx. 1500 g/m²
Thickness by diameter:	Ø600 mm: Max. 30mm, min. 6mm. (+/- 2mm) Ø1200 mm: Max. 45mm, min. 6mm. (+/- 2mm)
Flammability:	US: ASTM 84 A Class EU: EN 13501 / Result 'B-s1,d0'
Light fastness grade:	ISO 105 B02:1994 / Result '4+'
Maintenance:	Indoor use only. Cleaning methods: Vacuum regularly. Wipe clean with a damp cloth. Professionally dry clean. Bleach cleanable (only natural colors).

More information about Pluffy Material on catalogue page 14.


Diffusion


Absorption


Attenuation


Low Tone


Mid Tone


High Tone

PLUFFY ACOUSTIC COLORS

(See on page 15)



BODY COLORS



Black | Grey | Anthracite | White | RAL | Special Colors

LIGHTING TYPES

Direct-only | Direct-Indirect | Indirect-only

MOUNTING TYPES



Wall-Mounted

ROTUND WALL

DIAMETER ● Ø1200 MM
COLOR **BEG1012** BEIGE







OBLONG

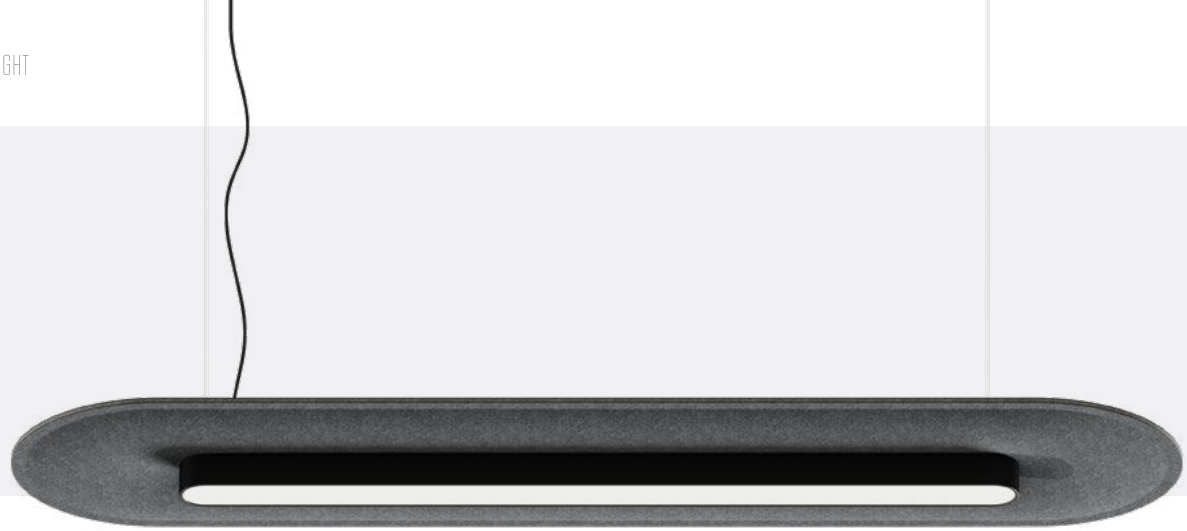

OBLONG

GENERAL INFORMATIONS

Body Parameters

MATERIALS

Aluminum luminaire body / Microprismatic diffuser / Pluffy Acoustic material.

MOUNTING

Multi-Point suspended luminaire.

Light Parameters

LIGHT SOURCE

LED, Microprismatic diffuser, Direct only. CRI>80 or CRI>90.

CONTROL

External driver. ON/OFF, DALI, PushDim, Bluetooth.

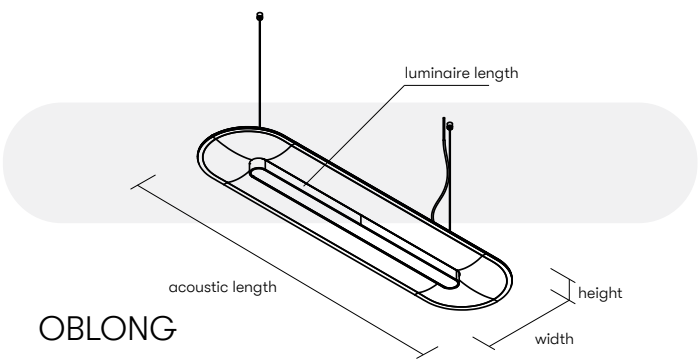

OBLONG

HEIGHT
- 65 mm

WIDTH
- 300 mm

LENGTH

	●	●
ACOUSTIC:	1200 mm	1800 mm
LUMINAIRE:	860 mm	1420 mm
	20 W / 2000 lm	**33 W / 3300 lm**

DIFFUSER
- M microprismatic
- S standard (opal)
- L lenses

COLOR TEMPERATURE
- 2 2700 K
- 3 3000 K
- 4 4000 K
- 1 RGBW
- 5 Tunable White

CE 220V 240V LEDs 50/60Hz

Lumen values are calculated at 4000K.



OBLONG

LENGTH ● 1200 MM

COLOR **DGR2093** DARK GREY

OBLONG
SPECIFIC DATA

ACOUSTIC PARAMETERS

Material:	PET Felt, 60% recycled from plastic bottles
Weight:	apx. 1500 g/m²
Thickness:	Max. 30mm (+/- 2mm). Min. 6mm (+/- 2mm).
Flammability:	US: ASTM 84 A Class EU: EN 13501 / Result 'B-s1,d0'
Light fastness grade:	ISO 105 B02:1994 / Result '4+'
Maintenance:	Indoor use only. Cleaning methods: Vacuum regularly. Wipe clean with a damp cloth. Professionally dry clean. Bleach cleanable (only natural colors).

More information about Pluffy Material on catalogue page 14.


Diffusion


Absorption


Low Tone


Mid Tone


High Tone

PLUFFY ACOUSTIC COLORS
(See on page 15)



BODY COLORS



Black | Grey | Anthracite | White | RAL | Special Colors

LIGHTING TYPES



Direct-only | Direct-Indirect | Indirect-only

MOUNTING TYPES
with external driver



Multi-Point Pendant



OBLONG

LENGTH ● 1200 MM

COLOR **BEG1012** BEIGE





CLOUD



CLOUD

GENERAL INFORMATIONS

Body Parameters

MATERIALS

Aluminum luminaire body / Opal diffuser / Pluffy Acoustic material.

MOUNTING

Multi-Point suspended luminaire.

Light Parameters

LIGHT SOURCE

LED, Opal diffuser, Direct only. CRI>80 or CRI>90.

CONTROL

External driver. ON/OFF, DALI, PushDim, Bluetooth.

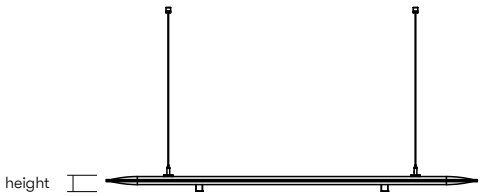

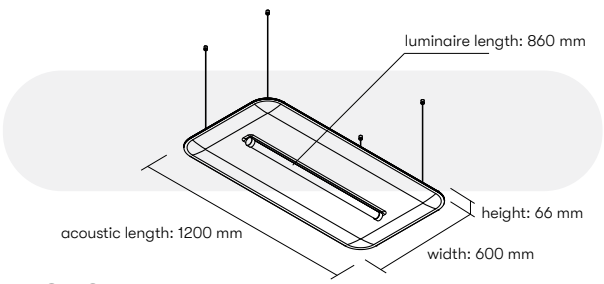

CLOUD **SINGLE**

HEIGHT
- 66 mm

WIDTH
- 600 mm

LENGTH

ACOUSTIC:	1200 mm
LUMINAIRE:	860 mm
	18 W / 1980 lm

DIFFUSER
- M microprismatic
- S standard (opal)
- L lenses

COLOR TEMPERATURE
- 2 2700 K
- 3 3000 K
- 4 4000 K
- 1 RGBW
- 5 Tunable White

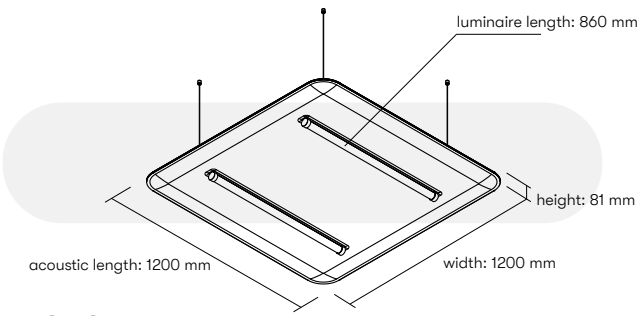

CLOUD **DOUBLE**

HEIGHT
- 81 mm

WIDTH
- 1200 mm

LENGTH

ACOUSTIC:	1200 mm
LUMINAIRE:	860 mm
	36 W / 3960 lm

DIFFUSER
- M microprismatic
- S standard (opal)
- L lenses

COLOR TEMPERATURE
- 2 2700 K
- 3 3000 K
- 4 4000 K
- 1 RGBW
- 5 Tunable White

CE 220V 240V LEDs 50/60Hz

Lumen values are calculated at 4000K.

CLOUD **DOUBLE**

BODY SIZE ● 1200X1200 MM
COLOR **DGR2093** DARK GREY



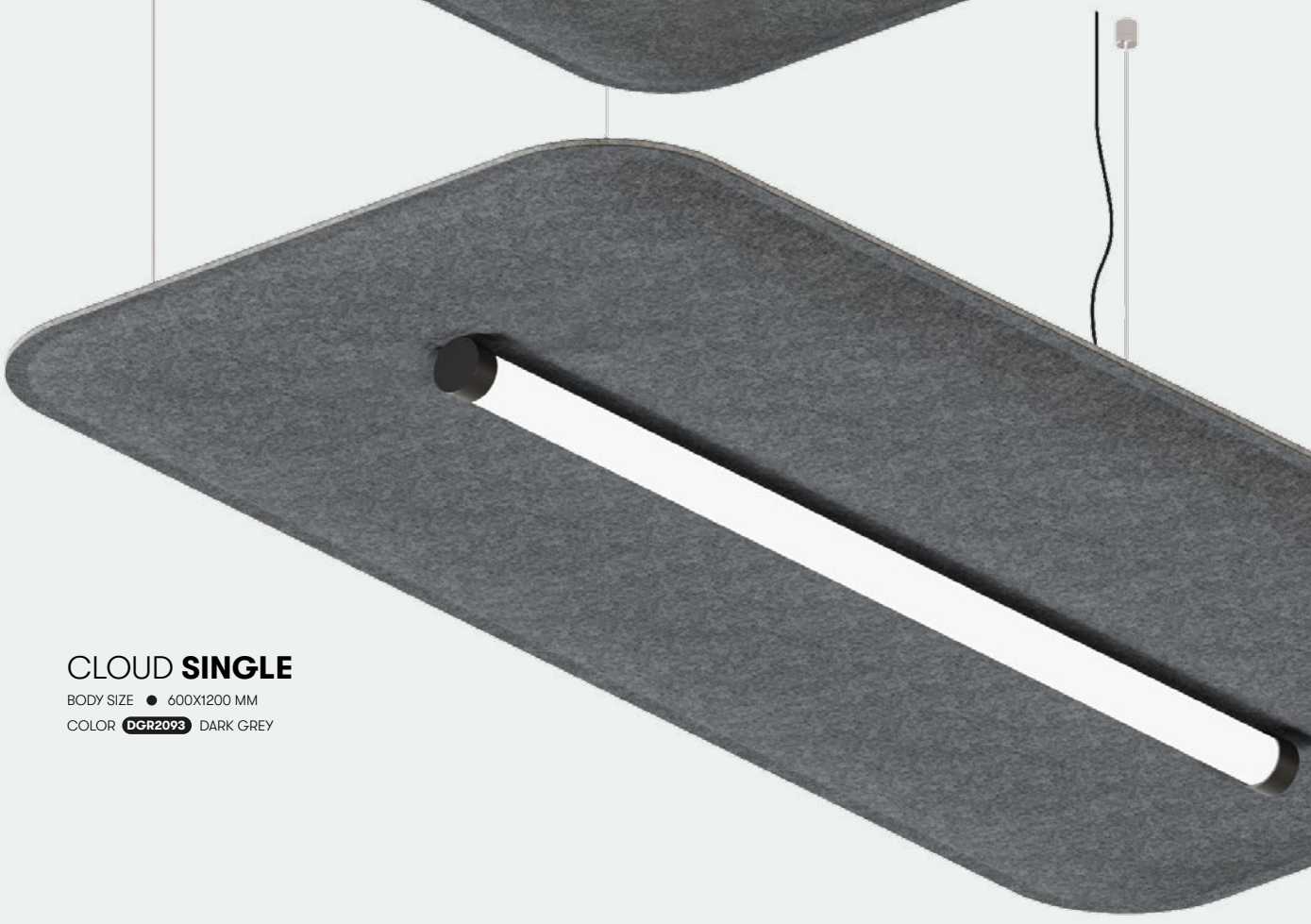

CLOUD **SINGLE**

BODY SIZE ● 600X1200 MM
COLOR **DGR2093** DARK GREY

CLOUD
SPECIFIC DATA

ACOUSTIC PARAMETERS

Material:	PET Felt, 60% recycled from plastic bottles
Weight:	apx. 1500 g/m²
Thickness by body:	600x1200 mm: Max. 30mm, min. 6mm. (+/- 2mm) 1200x1200 mm: Max. 45mm, min. 6mm. (+/- 2mm)
Flammability:	US: ASTM 84 A Class EU: EN 13501 / Result 'B-s1,d0'
Light fastness grade:	ISO 105 B02:1994 / Result '4+'
Maintenance:	Indoor use only. Cleaning methods: Vacuum regularly. Wipe clean with a damp cloth. Professionally dry clean. Bleach cleanable (only natural colors).

More information about Pluffy Material on catalogue page 14.

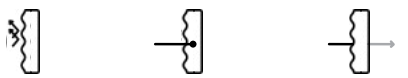

Diffusion | Absorption | Attenuation



Low Tone | Mid Tone | High Tone

PLUFFY ACOUSTIC COLORS

(See on page 15)



BODY COLORS



Black | Grey | Anthracite | White | RAL | Special Colors

LIGHTING TYPES

1 Direct-only | 2 Direct-Indirect | 3 Indirect-only

MOUNTING TYPES

with external driver



M Multi-Point Pendant

CLOUD **DOUBLE**

BODY SIZE ● 1200X1200 MM
COLOR **BEG1012** BEIGE



CLOUD **SINGLE**

BODY SIZE ● 600X1200 MM
COLOR **BEG1012** BEIGE





CLOUD DARK



CLOUD DARK

GENERAL INFORMATIONS

Body Parameters

MATERIALS

Aluminum luminaire body / Microcell diffuser / Pluffy Acoustic material.

MOUNTING

Multi-Point suspended luminaire.

Light Parameters

LIGHT SOURCE

LED, Diffuser with lenses, Direct only. CRI>80 or CRI>90.

CONTROL

External driver. ON/OFF, DALI, PushDim, Bluetooth.

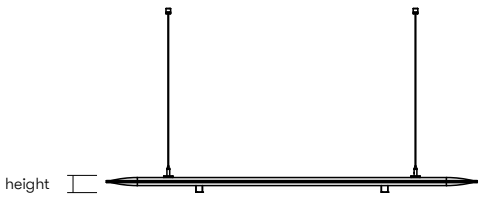

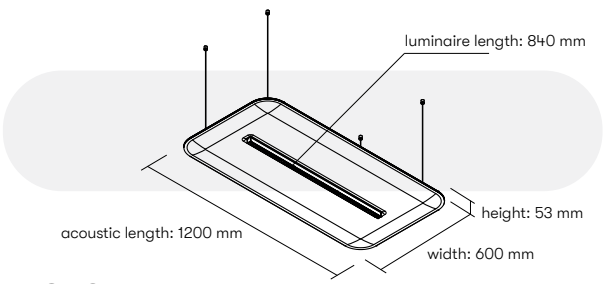

CLOUD DARK **SINGLE**

HEIGHT
- 53 mm

WIDTH
- 600 mm

LENGTH
- ACOUSTIC: 1200 mm
- LUMINAIRE: 840 mm

16 W / 1440 lm

DIFFUSER
- M microprismatic
- S standard (opal)
- L lenses

COLOR TEMPERATURE
- 2 2700 K
- 3 3000 K
- 4 4000 K
- 1 RGBW
- 5 Tunable White

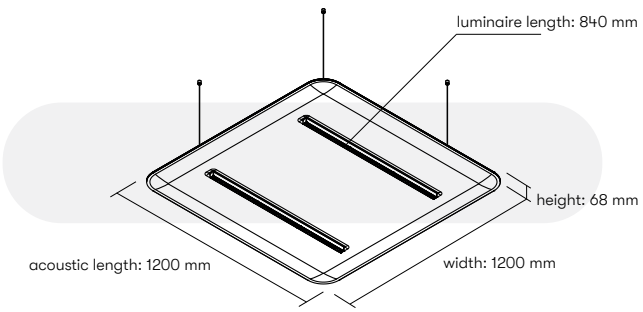

CLOUD DARK **DOUBLE**

HEIGHT
- 68 mm

WIDTH
- 1200 mm

LENGTH
- ACOUSTIC: 1200 mm
- LUMINAIRE: 840 mm

32 W / 2880 lm

DIFFUSER
- M microprismatic
- S standard (opal)
- L lenses

COLOR TEMPERATURE
- 2 2700 K
- 3 3000 K
- 4 4000 K
- 1 RGBW
- 5 Tunable White

CE 220V 240V LEDs 50/60Hz

Lumen values are calculated at 4000K.

CLOUD DARK **DOUBLE**

BODY SIZE ● 1200X1200 MM
COLOR **DGR2093** DARK GREY





CLOUD DARK **SINGLE**

BODY SIZE ● 600X1200 MM
COLOR **DGR2093** DARK GREY

CLOUD DARK
SPECIFIC DATA

ACOUSTIC PARAMETERS

Material:	PET Felt, 60% recycled from plastic bottles
Weight:	apx. 1500 g/m²
Thickness by body:	600x1200 mm: Max. 30mm, min. 6mm. (+/- 2mm) 1200x1200 mm: Max. 45mm, min. 6mm. (+/- 2mm)
Flammability:	US: ASTM 84 A Class EU: EN 13501 / Result 'B-s1,d0'
Light fastness grade:	ISO 105 B02:1994 / Result '4+'
Maintenance:	Indoor use only. Cleaning methods: Vacuum regularly. Wipe clean with a damp cloth. Professionally dry clean. Bleach cleanable (only natural colors).

More information about Pluffy Material on catalogue page 14.


Diffusion


Absorption


Attenuation


Low Tone


Mid Tone


High Tone

PLUFFY ACOUSTIC COLORS
(See on page 15)



BODY COLORS



Black | Grey | Anthracite | White | RAL | Special Colors

LIGHTING TYPES

Direct-only | Direct-Indirect | Indirect-only

MOUNTING TYPES
with external driver



Multi-Point Pendant

CLOUD DARK **DOUBLE**

BODY SIZE ● 1200X1200 MM
COLOR **BEG1012** BEIGE





CLOUD DARK **SINGLE**

BODY SIZE ● 600X1200 MM
COLOR **BEG1012** BEIGE





NOEM



NOEM

GENERAL INFORMATIONS

Body Parameters

MATERIALS

Aluminum luminaire body / Opal, microprismatic diffuser / Pluffy Acoustic material.

MOUNTING

Multi-Point or Single-Point suspended luminaire.

Light Parameters

LIGHT SOURCE

LED, Opal or microprismatic diffuser, Direct only. CRI>80 or CRI>90.

CONTROL

ON/OFF, DALI, PushDim, Bluetooth.

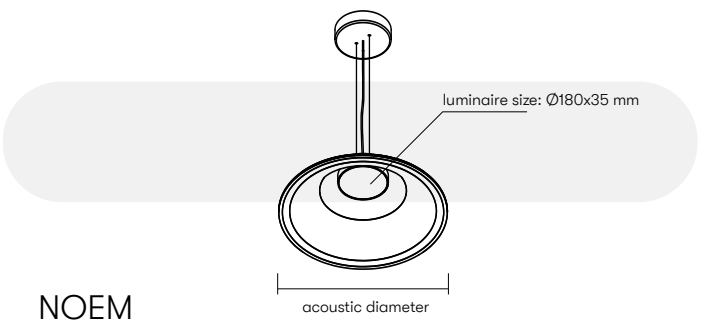

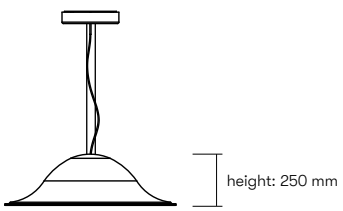

NOEM

HEIGHT
- 250 mm

DIAMETER

	●	●
ACOUSTIC:	Ø600	Ø800
LUMINAIRE:	Ø180x35 mm	Ø180x35 mm
	18 W / 1800 lm	18 W / 1800 lm

DIFFUSER
- M microprismatic
- S standard (opal)
- L lenses

COLOR TEMPERATURE
- 2 2700 K
- 3 3000 K
- 4 4000 K
- 1 RGBW
- 5 Tunable White

CE 220V 240V LEDs 50/60Hz

Lumen values are calculated at 4000K.



NOEM

DIAMETER ● Ø600 MM

COLOR **DGR2093** DARK GREY

NOEM
SPECIFIC DATA

ACOUSTIC PARAMETERS

Material:	PET Felt, 60% recycled from plastic bottles
Weight:	apx. 1500 g/m²
Thickness:	Max. 16mm (+/- 2mm). Min. 6mm (+/- 2mm).
Flammability:	US: ASTM 84 A Class EU: EN 13501 / Result 'B-s1,d0'
Light fastness grade:	ISO 105 B02:1994 / Result '4+'
Maintenance:	Indoor use only. Cleaning methods: Vacuum regularly. Wipe clean with a damp cloth. Professionally dry clean. Bleach cleanable (only natural colors).

More information about Pluffy Material on catalogue page 14.


Diffusion


Absorption


Low Tone


Mid Tone


High Tone

PLUFFY ACOUSTIC COLORS
(See on page 15)



BODY COLORS



Black | Grey | Anthracite | White | RAL | Special Colors

LIGHTING TYPES



Direct-only | Direct-Indirect | Indirect-only

MOUNTING TYPES



Multi-Point Pendant | Single-Point Pendant

NOEM

DIAMETER ● Ø600 MM

COLOR **BEG1012** BEIGE







NOEM LINEAR



NOEM LINEAR

GENERAL INFORMATIONS

Body Parameters

MATERIALS

Aluminum luminaire body / Opal, microprismatic diffuser / Pluffy Acoustic material.

MOUNTING

Multi-Point suspended luminaire.

Light Parameters

LIGHT SOURCE

LED, Opal or microprismatic diffuser, Direct only. CRI>80 or CRI>90.

CONTROL

ON/OFF, DALI, PushDim, Bluetooth.

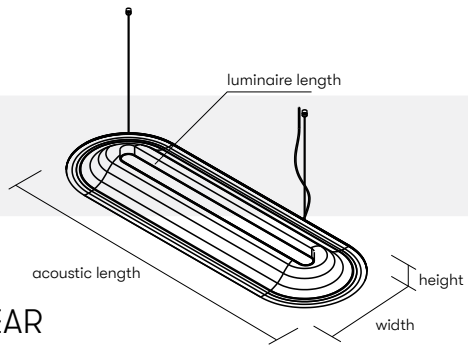

NOEM LINEAR

HEIGHT
- 90 mm

WIDTH
- 400 mm

LENGTH

	●	●	●
ACOUSTIC:	1300 mm	1950 mm	2600 mm
LUMINAIRE:	860 mm	1510 mm	2160 mm
	20 W / 2500 lm	**35 W / 3500 lm**	**50 W / 5000 lm**

DIFFUSER
- M microprismatic
- S standard (opal)
- L lenses

COLOR TEMPERATURE
- 2 2700 K
- 3 3000 K
- 4 4000 K
- 1 RGBW
- 5 Tunable White

CE 220V 240V LEDs 50/60Hz

Lumen values are calculated at 4000K.



NOEM LINEAR

LENGTH ● 1300 MM

COLOR **DGR2093** DARK GREY

NOEM LINEAR
SPECIFIC DATA

ACOUSTIC PARAMETERS

Material:	PET Felt, 60% recycled from plastic bottles
Weight:	apx. 1500 g/m²
Thickness:	Max. 16mm (+/- 2mm). Min. 6mm (+/- 2mm).
Flammability:	US: ASTM 84 A Class EU: EN 13501 / Result 'B-s1,d0'
Light fastness grade:	ISO 105 B02:1994 / Result '4+'
Maintenance:	Indoor use only. Cleaning methods: Vacuum regularly. Wipe clean with a damp cloth. Professionally dry clean. Bleach cleanable (only natural colors).

More information about Pluffy Material on catalogue page 14.


Diffusion


Absorption


Low Tone


Mid Tone


High Tone

PLUFFY ACOUSTIC COLORS

(See on page 15)



BODY COLORS



Black | Grey | Anthracite | White | RAL | Special Colors

LIGHTING TYPES



Direct-only | Direct-Indirect | Indirect-only

MOUNTING TYPES



Multi-Point Pendant | Single-Point Pendant



NOEM LINEAR

LENGTH ● 1300 MM

COLOR **BEG1012** BEIGE



TONDO FREE STAND

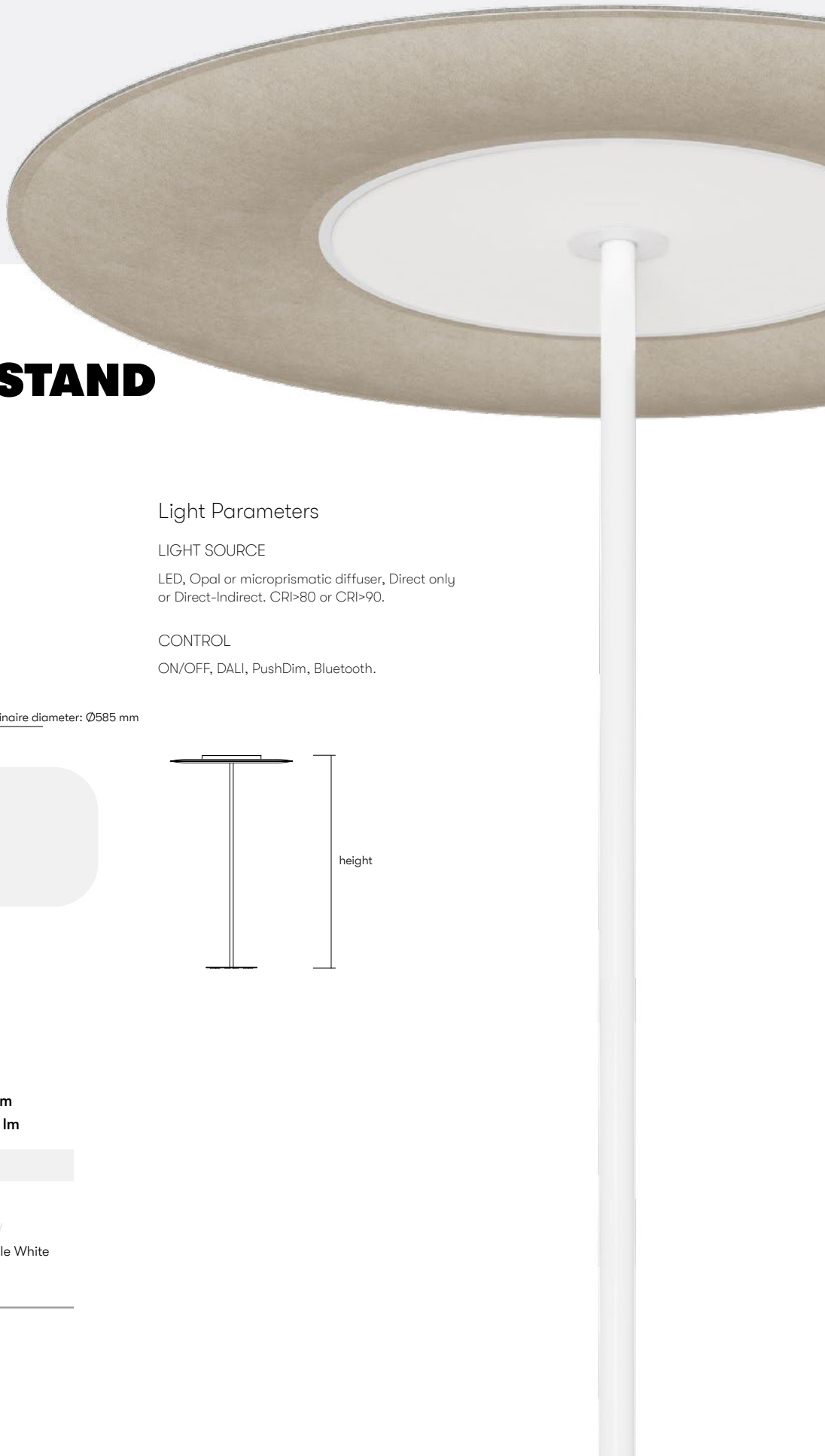

TONDO FREE STAND

GENERAL INFORMATIONS

Body Parameters

MATERIALS

Aluminum luminaire body / Opal, microprismatic diffuser / Pluffy Acoustic material.

MOUNTING

Free standing luminaire, position on the floor.

Light Parameters

LIGHT SOURCE

LED, Opal or microprismatic diffuser, Direct only or Direct-Indirect. CRI>80 or CRI>90.

CONTROL

ON/OFF, DALI, PushDim, Bluetooth.

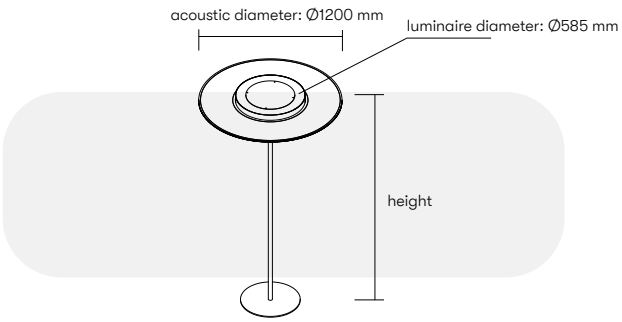

TONDO **FREE STAND**

HEIGHT
- 2110 mm

DIAMETER
-

ACOUSTIC: Ø1200 mm
LUMINAIRE: Ø585 mm
D: **65 W / 7100 lm**
D/I: **99 W / 11000 lm**

DIFFUSER
- M microprismatic
- S standard (opal)
- L lenses

COLOR TEMPERATURE
- 2 2700 K
- 3 3000 K
- 4 4000 K
- 1 RGBW
- 5 Tunable White

CE 220V 240V LEDs 50/60Hz

Lumen values are calculated at 4000K.

TONDO **FREE STAND**

DIAMETER ● Ø1200 MM

COLOR **BEG1012** BEIGE



TONDO FREE STAND
SPECIFIC DATA

ACOUSTIC PARAMETERS

Material:	PET Felt, 60% recycled from plastic bottles
Weight:	apx. 1500 g/m²
Thickness:	Max. 30mm (+/- 2mm). Min. 6mm (+/- 2mm).
Flammability:	US: ASTM 84 A Class EU: EN 13501 / Result 'B-s1,d0'
Light fastness grade:	ISO 105 B02:1994 / Result '4+'
Maintenance:	Indoor use only. Cleaning methods: Vacuum regularly. Wipe clean with a damp cloth. Professionally dry clean. Bleach cleanable (only natural colors).

More information about Pluffy Material on catalogue page 14.


Diffusion


Absorption


Attenuation


Low Tone


Mid Tone


High Tone

PLUFFY ACOUSTIC COLORS

(See on page 15)



BODY COLORS



Black | Grey | Anthracite | White | RAL | Special Colors

LIGHTING TYPES

Direct-only | Direct-Indirect | Indirect-only

MOUNTING TYPES



Free Stand

TONDO **FREE STAND**

DIAMETER ● Ø1200 MM

COLOR **BEG1012** BEIGE





TONDO PENDANT



TONDO PENDANT

GENERAL INFORMATIONS

Body Parameters

MATERIALS

Aluminum luminaire body / Opal, microprismatic diffuser / Pluffy Acoustic material.

MOUNTING

Multi-Point or Single-Point suspended luminaire.

Light Parameters

LIGHT SOURCE

LED, Opal or microprismatic diffuser, Direct only or Direct-Indirect. CRI>80 or CRI>90.

CONTROL

ON/OFF, DALI, PushDim, Bluetooth.

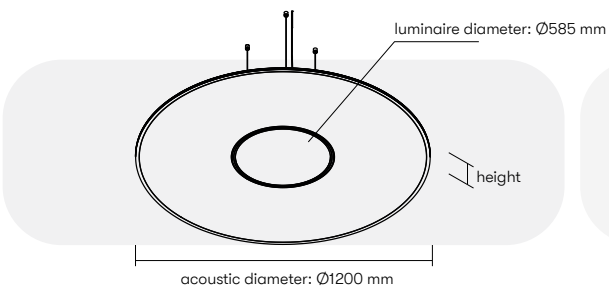



TONDO **PENDANT**

HEIGHT
- 75 mm

DIAMETER
-
ACOUSTIC: Ø1200 mm
LUMINAIRE: Ø585 mm

D: **65 W / 7100 lm**
D/I: **99 W / 11000 lm**

DIFFUSER
- (M) microprismatic
- (S) standard (opal)
- (L) lenses

COLOR TEMPERATURE
- (2) 2700 K
- (3) 3000 K
- (4) 4000 K
- (1) RGBW
- (5) Tunable White

CE 220V 240V LEDs 50/60Hz

TONDO **PLAIN**

HEIGHT
- 45 mm

DIAMETER
- Ø1200 mm

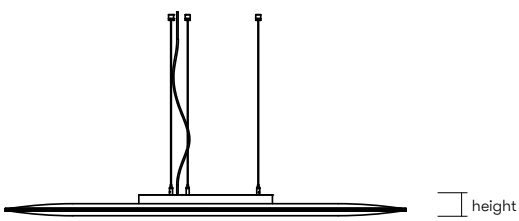

Lumen values are calculated at 4000K.

TONDO **PENDANT**

DIAMETER ● Ø1200 MM

COLOR **BEG1012** BEIGE



TONDO PENDANT
SPECIFIC DATA

ACOUSTIC PARAMETERS

Material:	PET Felt, 60% recycled from plastic bottles
Weight:	apx. 1500 g/m²
Thickness:	Max. 30mm (+/- 2mm). Min. 6mm (+/- 2mm).
Flammability:	US: ASTM 84 A Class EU: EN 13501 / Result 'B-s1,d0'
Light fastness grade:	ISO 105 B02:1994 / Result '4+'
Maintenance:	Indoor use only. Cleaning methods: Vacuum regularly. Wipe clean with a damp cloth. Professionally dry clean. Bleach cleanable (only natural colors).

More information about Pluffy Material on catalogue page 14.


Diffusion


Absorption


Attenuation


Low Tone


Mid Tone


High Tone

PLUFFY ACOUSTIC COLORS
(See on page 15)



BODY COLORS



Black | Grey | Anthracite | White | RAL | Special Colors

LIGHTING TYPES

Direct-only | Direct-Indirect | Indirect-only

MOUNTING TYPES

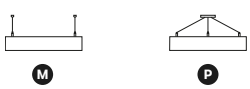

Multi-Point Pendant | Single-Point Pendant

TONDO **PENDANT**

DIAMETER ● Ø1200 MM

COLOR **BEG1012** BEIGE





TONDO DESK

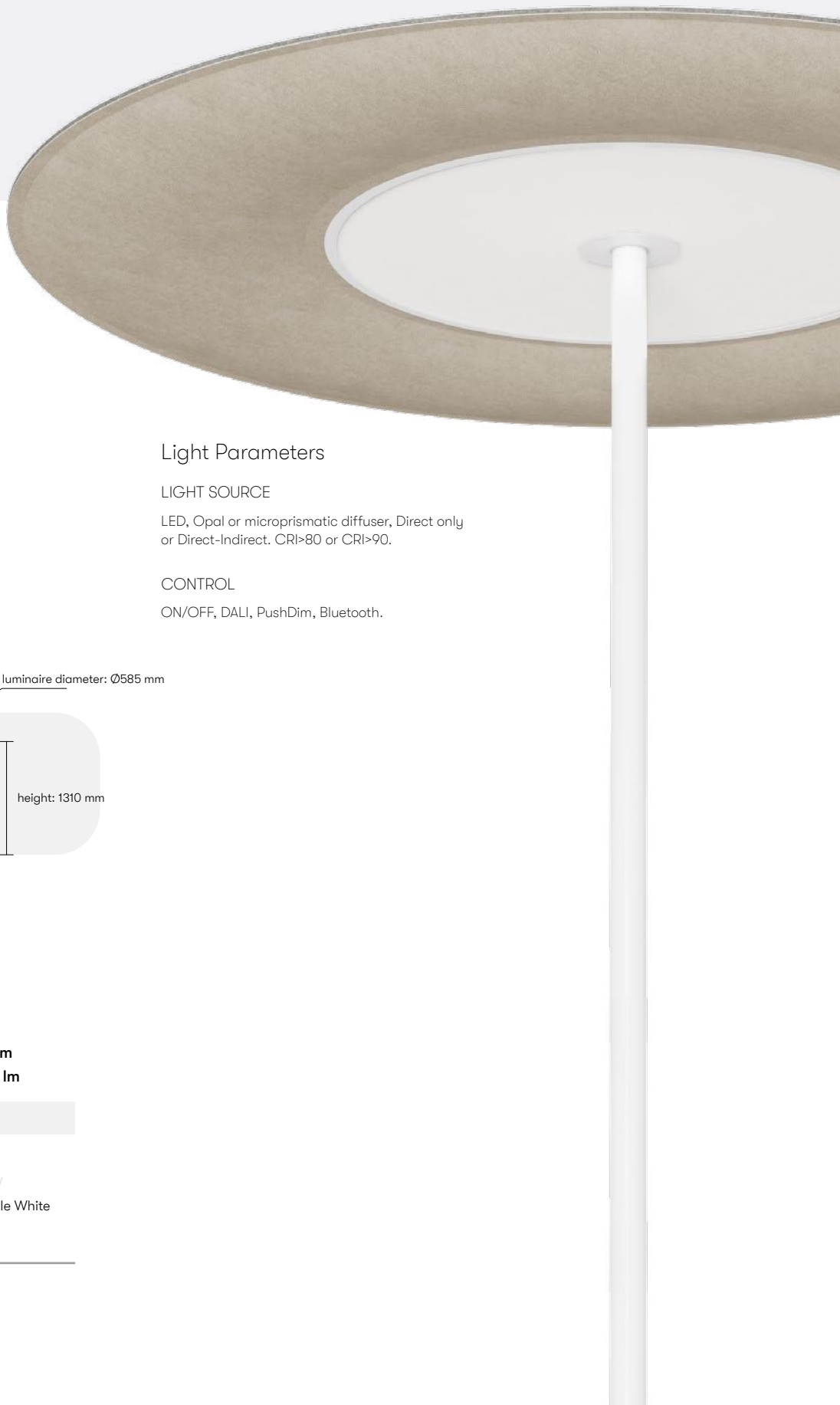

TONDO DESK

GENERAL INFORMATIONS

Body Parameters

MATERIALS

Aluminum luminaire body / Opal, microprismatic diffuser / Pluffy Acoustic material.

MOUNTING

Luminaire is mounted to desk.

Light Parameters

LIGHT SOURCE

LED, Opal or microprismatic diffuser, Direct only or Direct-Indirect. CRI>80 or CRI>90.

CONTROL

ON/OFF, DALI, PushDim, Bluetooth.

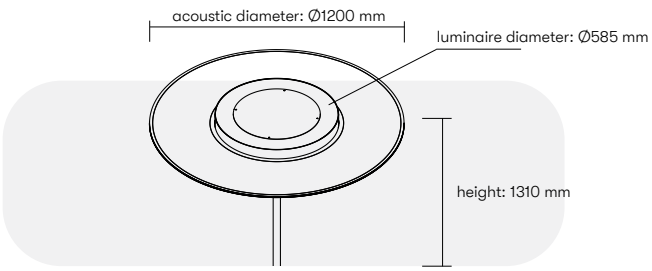

TONDO **DESK**

HEIGHT
- 1310 mm

DIAMETER
- ACOUSTIC: Ø1200 mm
- LUMINAIRE: Ø585 mm

D: **65 W / 7100 lm**
D/I: **99 W / 11000 lm**

DIFFUSER
- M microprismatic
- S standard (opal)
- L lenses

COLOR TEMPERATURE
- 2 2700 K
- 3 3000 K
- 4 4000 K
- 1 RGBW
- 5 Tunable White

CE 220V 240V LEDs 50/60Hz

Lumen values are calculated at 4000K.

TONDO **DESK**

DIAMETER ● Ø1200 MM
COLOR **BEG1012** BEIGE



TONDO DESK
SPECIFIC DATA

ACOUSTIC PARAMETERS

Material:	PET Felt, 60% recycled from plastic bottles
Weight:	apx. 1500 g/m²
Thickness:	Max. 30mm (+/- 2mm). Min. 6mm (+/- 2mm).
Flammability:	US: ASTM 84 A Class EU: EN 13501 / Result 'B-s1,d0'
Light fastness grade:	ISO 105 B02:1994 / Result '4+'
Maintenance:	Indoor use only. Cleaning methods: Vacuum regularly. Wipe clean with a damp cloth. Professionally dry clean. Bleach cleanable (only natural colors).

More information about Pluffy Material on catalogue page 14.

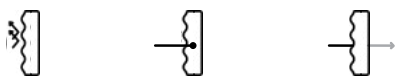

Diffusion | Absorption | Attenuation



Low Tone | Mid Tone | High Tone

PLUFFY ACOUSTIC COLORS

(See on page 15)



BODY COLORS

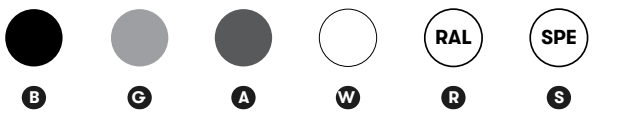

Black | Grey | Anthracite | White | RAL | Special Colors

LIGHTING TYPES

Direct-only | Direct-Indirect | Indirect-only

MOUNTING TYPES



Desk mounted

TONDO **DESK**

DIAMETER ● Ø1200 MM
COLOR **BEG1012** BEIGE







RODA



RODA

GENERAL INFORMATIONS

Body Parameters

MATERIALS

Aluminum luminaire body / Opal, microprismatic diffuser / Pluffy Acoustic material.

MOUNTING

Multi-Point suspended luminaire.

Light Parameters

LIGHT SOURCE

LED, Opal or microprismatic diffuser, Direct only or Direct-Indirect. CRI>80 or CRI>90.

CONTROL

ON/OFF, DALI, PushDim, Bluetooth.

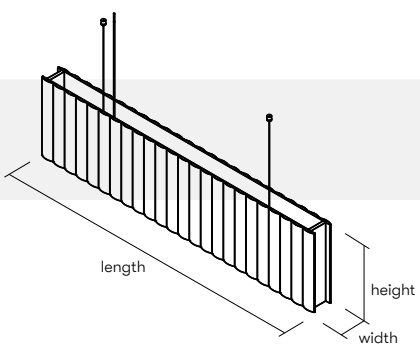

RODA

HEIGHT
- 300 mm

WIDTH
- 76 mm

LENGTH

	●	●
ACOUSTIC:	1200 mm	2320mm
D:	**26 W / 2600 lm**	**52 W / 5200 lm**
D/I:	**39 W / 3900 lm**	**78 W / 7800 lm**

DIFFUSER
- M microprismatic
- S standard (opal)
- L lenses

COLOR TEMPERATURE
- 2 2700 K
- 3 3000 K
- 4 4000 K
- 1 RGBW
- 5 Tunable White

CE 220V 240V LEDs 50/60Hz

Lumen values are calculated at 4000K.



RODA

LENGTH ● 1200 MM

COLOR **DGR2093** DARK GREY

RODA
SPECIFIC DATA

ACOUSTIC PARAMETERS

Material:	PET Felt, 60% recycled from plastic bottles
Weight:	apx. 1500 g/m²
Thickness:	Max. 13mm (+/- 2mm). Min. 6mm (+/- 2mm).
Flammability:	US: ASTM 84 A Class EU: EN 13501 / Result 'B-s1,d0'
Light fastness grade:	ISO 105 B02:1994 / Result '4+'
Maintenance:	Indoor use only. Cleaning methods: Vacuum regularly. Wipe clean with a damp cloth. Professionally dry clean. Bleach cleanable (only natural colors).

More information about Pluffy Material on catalogue page 14.


Low Tone


Mid Tone


High Tone

PLUFFY ACOUSTIC COLORS
(See on page 15)



BODY COLORS



B Black
G Grey
A Anthracite
W White
R RAL
S Special Colors

LIGHTING TYPES

1 Direct-only
2 Direct-Indirect
3 Indirect-only

MOUNTING TYPES



M Multi-Point Pendant



RODA

LENGTH ● 1200 MM

COLOR **BEG1012** BEIGE





FURRY



FURRY

GENERAL INFORMATIONS

Body Parameters

MATERIALS

Aluminum luminaire body / Lenses / Pluffy Acoustic material.

MOUNTING

Multi-Point or Single-Point suspended luminaire.

Light Parameters

LIGHT SOURCE

LED, Diffuser with lenses, Direct only. CRI>80 or CRI>90.

CONTROL

External driver. ON/OFF, DALI, PushDim, Bluetooth.

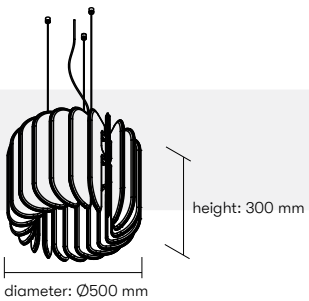

FURRY

HEIGHT
- 300 mm

DIAMETER
- ACOUSTIC: Ø500 mm

10 W / 1100 lm

DIFFUSER
- M microprismatic
- S standard (opal)
- L lenses

COLOR TEMPERATURE
- 2 2700 K
- 3 3000 K
- 4 4000 K
- 1 RGBW
- 5 Tunable White

CE 220V 240V LEDs 50/60Hz

Lumen values are calculated at 4000K.

FURRY

DIAMETER ● Ø500 MM
COLOR **BLC2094** BLACK



FURRY
SPECIFIC DATA

ACOUSTIC PARAMETERS

Material:	PET Felt, 60% recycled from plastic bottles
Weight:	apx. 1500 g/m²
Thickness:	Max. 16mm (+/- 2mm). Min. 6mm (+/- 2mm).
Flammability:	US: ASTM 84 A Class EU: EN 13501 / Result 'B-s1,d0'
Light fastness grade:	ISO 105 B02:1994 / Result '4+'
Maintenance:	Indoor use only. Cleaning methods: Vacuum regularly. Wipe clean with a damp cloth. Professionally dry clean. Bleach cleanable (only natural colors).

More information about Pluffy Material on catalogue page 14.


Diffusion


Absorption


Low Tone


Mid Tone


High Tone

PLUFFY ACOUSTIC COLORS
(See on page 15)



BODY COLORS



Black | Grey | Anthracite | White | RAL | Special Colors

LIGHTING TYPES

Direct-only | Direct-Indirect | Indirect-only

MOUNTING TYPES
with external driver



Multi-Point Pendant | Single-Point Pendant

FURRY

DIAMETER ● Ø500 MM
COLOR **BEG1012** BEIGE







ILONA ACOUSTIC



ILONA ACOUSTIC

GENERAL INFORMATIONS

Body Parameters

MATERIALS

Aluminum luminaire body / Opal diffuser / Pluffy Acoustic material.

MOUNTING

Multi-Point or Single-Point suspended luminaire.

Light Parameters

LIGHT SOURCE

LED, Opal diffuser, Direct only.
CRI>80 or CRI>90.

CONTROL

External driver. ON/OFF, DALI, PushDim, Bluetooth.

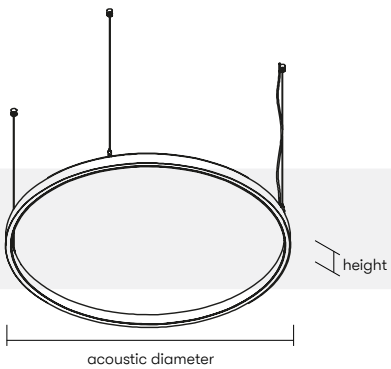

ILONA ACOUSTIC

HEIGHT
- 58 mm

PROFILE WIDTH
- 25 mm

DIAMETER

● Ø600 mm	● Ø1200mm
39 W / 2370 lm	**79 W / 4748 lm**

DIFFUSER
- M microprismatic
- S standard (opal)
- L lenses

COLOR TEMPERATURE
- 2 2700 K
- 3 3000 K
- 4 4000 K
- 1 RGBW
- 5 Tunable White

CE 220V 240V LEDs 50/60Hz

Lumen values are calculated at 4000K.



ILONA DARK ACOUSTIC

DIAMETER ● Ø1200 MM

ILONA ACOUSTIC

DIAMETER ● Ø600 MM

COLOR **DGR2093** DARK GREY

ILONA DARK ACOUSTIC

DIAMETER ● Ø600 MM

COLOR **BEG1012** BEIGE

ILONA ACOUSTIC
SPECIFIC DATA

ACOUSTIC PARAMETERS

Material:	PET Felt, 60% recycled from plastic bottles
Weight:	apx. 1500 g/m²
Thickness by diameter:	Ø600 mm: Max. 30mm, min. 6mm. (+/- 2mm) Ø1200 mm: Max. 45mm, min. 6mm. (+/- 2mm)
Flammability:	US: ASTM 84 A Class EU: EN 13501 / Result 'B-s1,d0'
Light fastness grade:	ISO 105 B02:1994 / Result '4+'
Maintenance:	Indoor use only. Cleaning methods: Vacuum regularly. Wipe clean with a damp cloth. Professionally dry clean. Bleach cleanable (only natural colors).

More information about Pluffy Material on catalogue page 14.


Diffusion


Absorption


Attenuation


Low Tone


Mid Tone


High Tone

PLUFFY ACOUSTIC COLORS
(See on page 15)



BODY COLORS



Black | Grey | Anthracite | White | RAL | Special Colors

LIGHTING TYPES

Direct-only | Direct-Indirect | Indirect-only

MOUNTING TYPES
with external driver

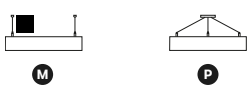

Multi-Point Pendant | Single-Point Pendant

ILONA ACOUSTIC

DIAMETER ● Ø1200 MM

COLOR **DGR2093** DARK GREY

ILONA ACOUSTIC

DIAMETER ● Ø600 MM







ILONA DARK ACOUSTIC



ILONA DARK ACOUSTIC

GENERAL INFORMATIONS

Body Parameters

MATERIALS

Aluminum luminaire body / Microcell diffuser / Pluffy Acoustic material.

MOUNTING

Multi-Point or Single-Point suspended luminaire.

Light Parameters

LIGHT SOURCE

LED, Diffuser with lenses, Direct only. CRI>80 or CRI>90.

CONTROL

External driver. ON/OFF, DALI, PushDim, Bluetooth.

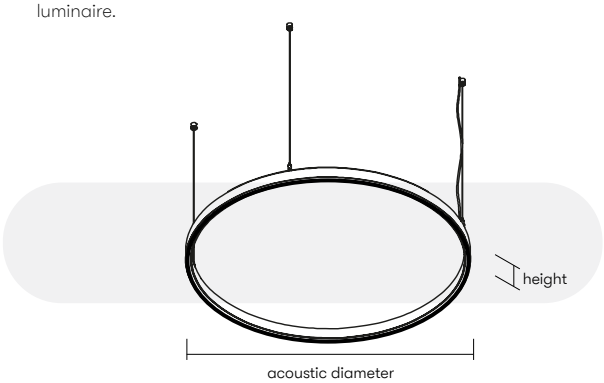

ILONA ACOUSTIC

HEIGHT
- 58 mm

PROFILE WIDTH
- 25 mm

DIAMETER

Ø600 mm	Ø1200mm
27 W / 2700 lm	**45 W / 4500 lm**

DIFFUSER
- M microprismatic
- S standard (opal)
- L lenses

COLOR TEMPERATURE
- 2 2700 K
- 3 3000 K
- 4 4000 K
- 1 RGBW
- 5 Tunable White

CE 220V 240V LEDs 50/60Hz

Lumen values are calculated at 4000K.



ILONA DARK ACOUSTIC

DIAMETER ● Ø1200 MM

ILONA ACOUSTIC

DIAMETER ● Ø600 MM

COLOR **DGR2093** DARK GREY

ILONA DARK ACOUSTIC

DIAMETER ● Ø600 MM

COLOR **BEG1012** BEIGE

ILONA ACOUSTIC
SPECIFIC DATA

ACOUSTIC PARAMETERS

Material:	PET Felt, 60% recycled from plastic bottles
Weight:	apx. 1500 g/m²
Thickness by diameter:	Ø600 mm: Max. 30mm, min. 6mm. (+/- 2mm) Ø1200 mm: Max. 45mm, min. 6mm. (+/- 2mm)
Flammability:	US: ASTM 84 A Class EU: EN 13501 / Result 'B-s1,d0'
Light fastness grade:	ISO 105 B02:1994 / Result '4+'
Maintenance:	Indoor use only. Cleaning methods: Vacuum regularly. Wipe clean with a damp cloth. Professionally dry clean. Bleach cleanable (only natural colors).

More information about Pluffy Material on catalogue page 14.

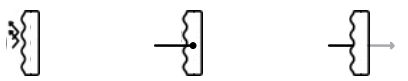

Diffusion | Absorption | Attenuation



Low Tone | Mid Tone | High Tone

PLUFFY ACOUSTIC COLORS

(See on page 15)



BODY COLORS



Black | Grey | Anthracite | White | RAL | Special Colors

LIGHTING TYPES

1 Direct-only | 2 Direct-Indirect | 3 Indirect-only

MOUNTING TYPES

with external driver

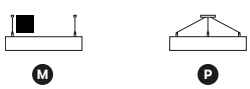

M Multi-Point Pendant | P Single-Point Pendant

ILONA DARK ACOUSTIC

DIAMETER ● Ø1200 MM

COLOR **DGR2093** DARK GREY

ILONA DARK ACOUSTIC

DIAMETER ● Ø600 MM



FELTLY ACOUSTIC

Luminaires with Feltly material





YULA



YULA

GENERAL INFORMATIONS

Body Parameters

MATERIALS

Aluminum luminaire body / Opal, microprismatic diffuser / Feltly Acoustic material.

MOUNTING

Multi-Point suspended luminaire.

Light Parameters

LIGHT SOURCE

LED, Opal or microprismatic diffuser, Direct only. CRI>80 or CRI>90.

CONTROL

External driver. ON/OFF, DALI, PushDim, Bluetooth.

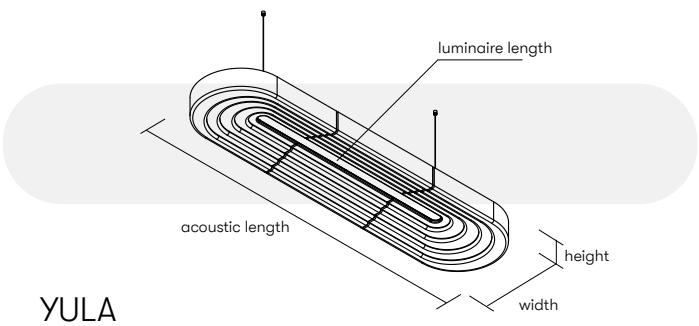

YULA

HEIGHT
- 110 mm

WIDTH
- 450 mm

LENGTH

	●	●
ACOUSTIC:	1800 mm	2400 mm
LUMINAIRE:	1130 mm	1730 mm
	26 W / 2730 lm	**40 W / 4200 lm**

DIFFUSER
- M microprismatic
- S standard (opal)
- L lenses

COLOR TEMPERATURE
- 2 2700 K
- 3 3000 K
- 4 4000 K
- 1 RGBW
- 5 Tunable White

CE 220V 240V LEDs 50/60Hz

Lumen values are calculated at 4000K.

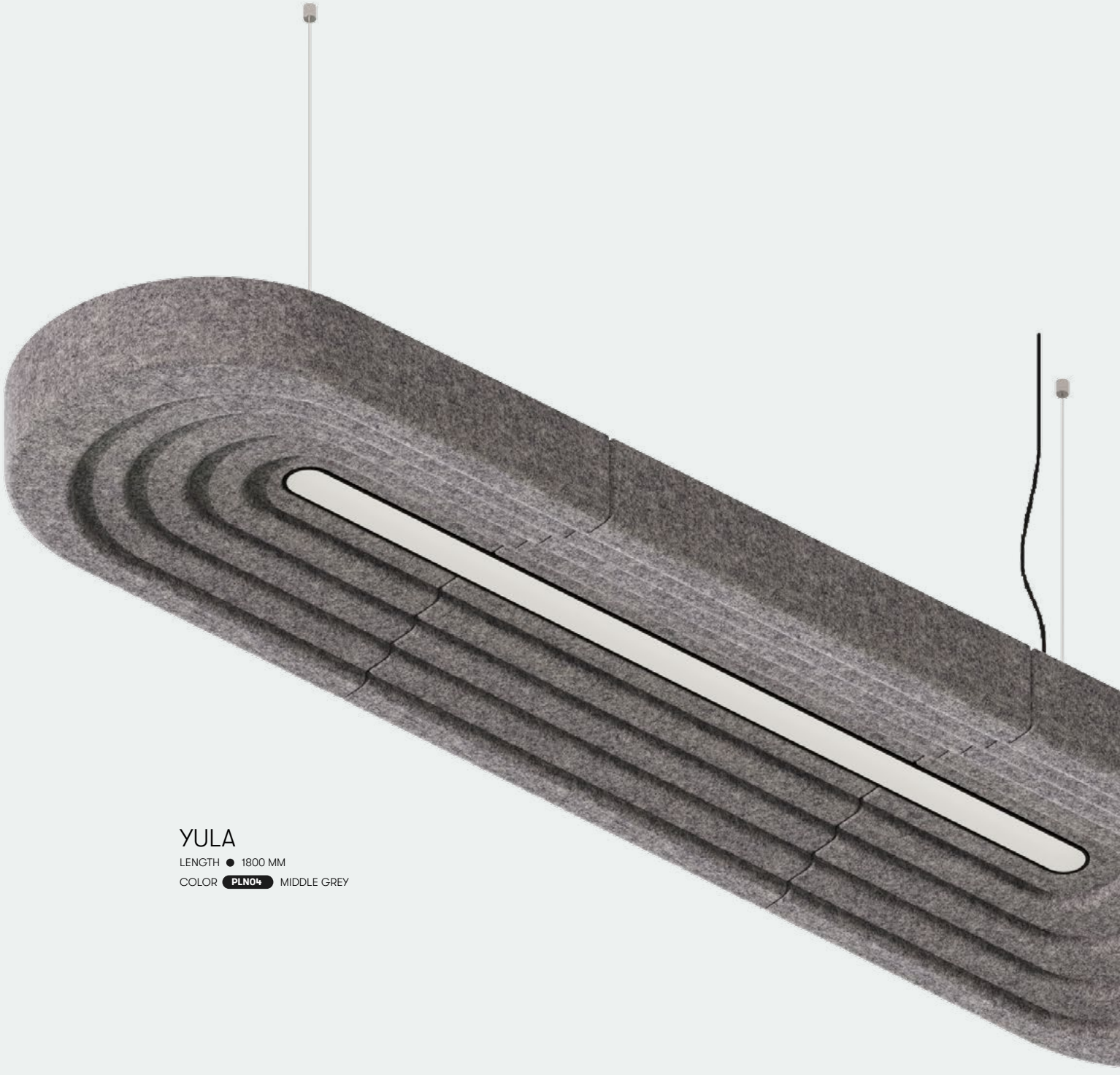

YULA

LENGTH ● 1800 MM

COLOR **PLN04** MIDDLE GREY

YULA
SPECIFIC DATA

ACOUSTIC PARAMETERS

Material:	PET Felt, 50% recycled from plastic bottles
Weight:	apx. 1500 g/m²
Thickness:	Natural Colors: 6mm or 12mm Color Selection: 7mm or 13mm
Flammability:	EU: EN 13501 / Result 'B-s1,d0'
Light fastness grade:	ISO 105 B02:1994 / Result '6+'
Maintenance:	Indoor use only. Cleaning methods: Vacuum regularly. Wipe clean with a damp cloth. Professionally dry clean. Bleach cleanable (only natural colors).

More information about Feltly Material on catalogue page 16.


Diffusion


Absorption


Low Tone


Mid Tone


High Tone

FELTLY ACOUSTIC COLORS
(See on page 17)



BODY COLORS



Black | Grey | Anthracite | White | RAL | Special Colors

LIGHTING TYPES



1 Direct-only | 2 Direct-Indirect | 3 Indirect-only

MOUNTING TYPES
with external driver



Multi-Point Pendant

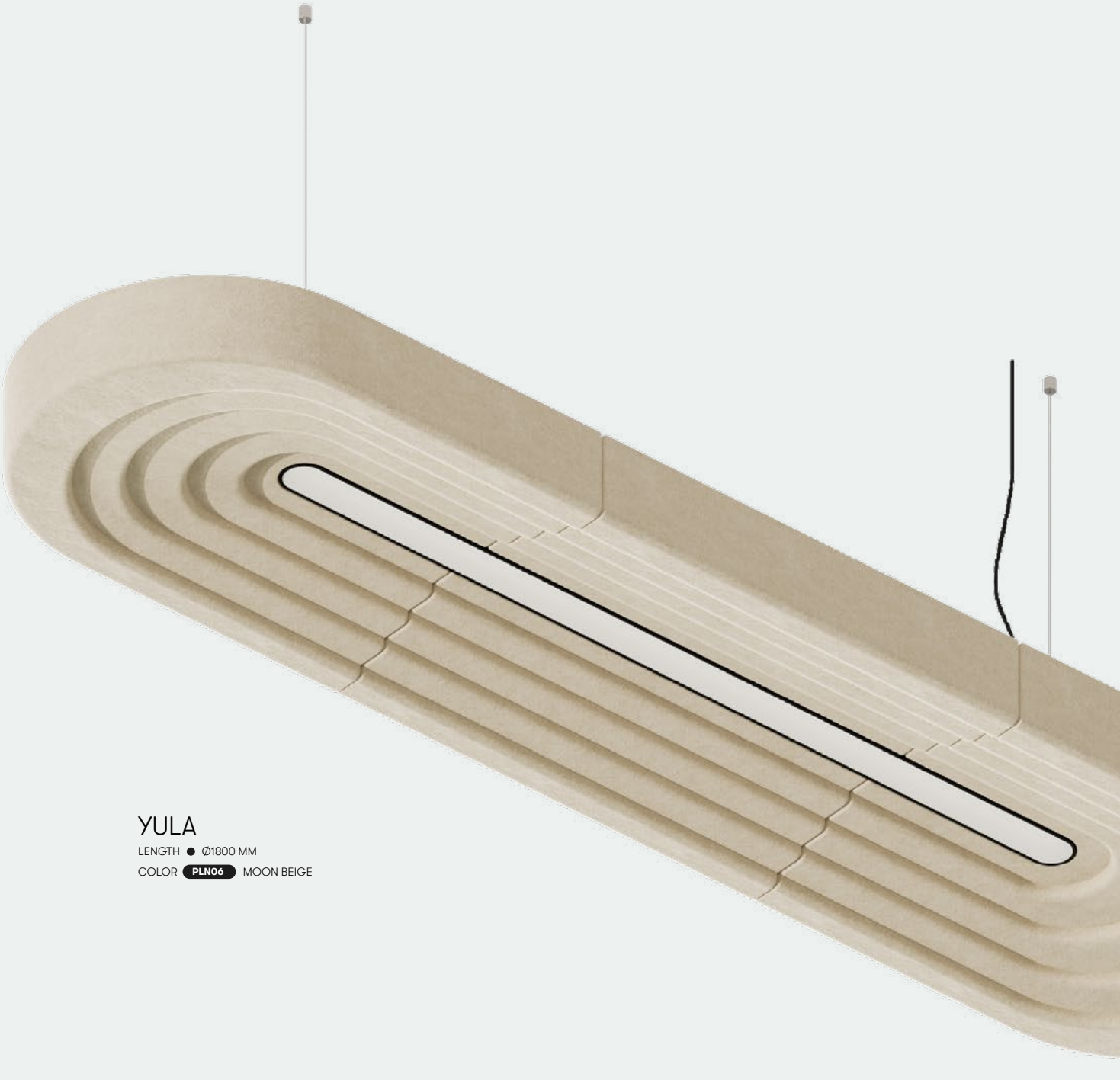

YULA

LENGTH ● Ø1800 MM

COLOR **PLN06** MOON BEIGE





reddot winner 2023

PARASOL

reddot winner 2023



PARASOL

reddot winner 2023

GENERAL INFORMATIONS

Body Parameters

MATERIALS

Aluminum luminaire body / Opal, microprismatic diffuser / Feltly Acoustic material.

MOUNTING

Multi-Point or Single-Point suspended luminaire.

Light Parameters

LIGHT SOURCE

LED, Opal or microprismatic diffuser, Direct only. CRI>80 or CRI>90.

CONTROL

External driver. ON/OFF, DALI, PushDim, Bluetooth.

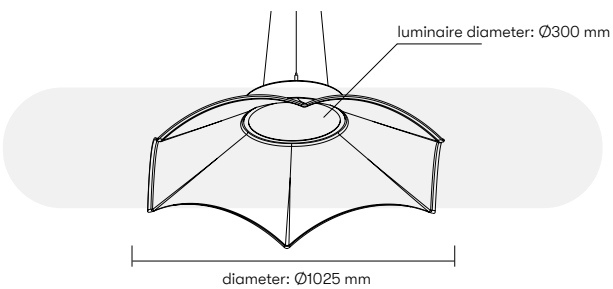

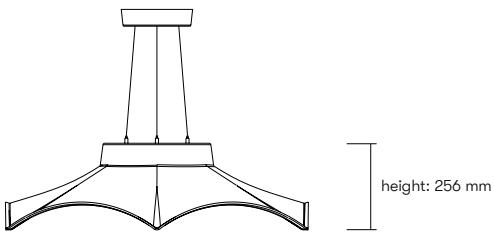

PARASOL

HEIGHT
- 256 mm

DIAMETER
- ACOUSTIC: Ø1025 mm
- LUMINAIRE: Ø300 mm

23 W / 2875 lm

DIFFUSER
- M microprismatic
- S standard (opal)
- L lenses

COLOR TEMPERATURE
- 2 2700 K
- 3 3000 K
- 4 4000 K
- 1 RGBW
- 5 Tunable White

CE 220V 240V LEDs 50/60Hz

Lumen values are calculated at 4000K.



reddot winner 2023

PARASOL

DIAMETER ● Ø1025 MM

COLOR PLN04 SPACE GREY

PARASOL
SPECIFIC DATA

ACOUSTIC PARAMETERS

Material:	PET Felt, 50% recycled from plastic bottles
Weight:	apx. 1500 g/m²
Thickness:	Natural Colors: 6mm or 12mm Color Selection: 7mm or 13mm
Flammability:	EU: EN 13501 / Result 'B-s1,d0'
Light fastness grade:	ISO 105 B02:1994 / Result '6+'
Maintenance:	Indoor use only. Cleaning methods: Vacuum regularly. Wipe clean with a damp cloth. Professionally dry clean. Bleach cleanable (only natural colors).

More information about Feltly Material on catalogue page 16.


Diffusion


Absorption


Mid Tone


High Tone

FELTLY ACOUSTIC COLORS
(See on page 17)



BODY COLORS

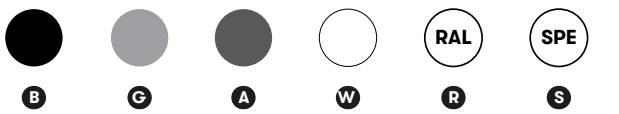

Black | Grey | Anthracite | White | RAL | Special Colors

LIGHTING TYPES



Direct-only | Direct-Indirect | Indirect-only

MOUNTING TYPES
with external driver



Multi-Point Pendant



reddot winner 2023
lighting design

PARASOL

DIAMETER ● Ø1025 MM
COLOR PLC16 LEAF





LARA



LARA

GENERAL INFORMATIONS

Body Parameters

MATERIALS

Aluminum luminaire body / Opal, microprismatic diffuser / Feltly Acoustic material.

MOUNTING

Multi-Point suspended luminaire.

Light Parameters

LIGHT SOURCE

LED, Opal or microprismatic diffuser, Direct only or Direct-Indirect. CRI>80 or CRI>90.

CONTROL

ON/OFF, DALI, PushDim, Bluetooth.

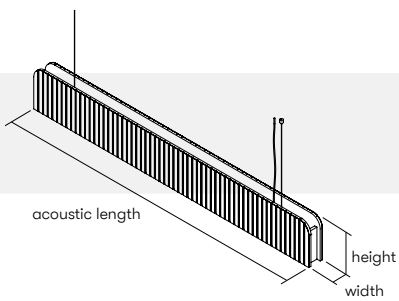

LARA

HEIGHT
- 200 mm

WIDTH
- 62 mm

LENGTH

	●	●	●	●	●
ACOUSTIC:	1190 mm	1470 mm	1750 mm	2020 mm	2310 mm
LUMINAIRE:	1140 mm	1420 mm	1700 mm	1980 mm	2260 mm
D:	**26 W / 2300 lm**	**32 W / 2890 lm**	**39 W / 3450 lm**	**45 W / 4026 lm**	**52 W /4595 lm**
D/I:	**39 W / 3450 lm**	**48 W / 4335 lm**	**59 W / 5175 lm**	**68 W / 6039 lm**	**78 W / 6893 lm**

DIFFUSER
- M microprismatic
- S standard (opal)
- L lenses

COLOR TEMPERATURE
- 2 2700 K
- 3 3000 K
- 4 4000 K
- 1 RGBW
- 5 Tunable White

CE 220V 240V LEDs 50/60Hz

Lumen values are calculated at 4000K.

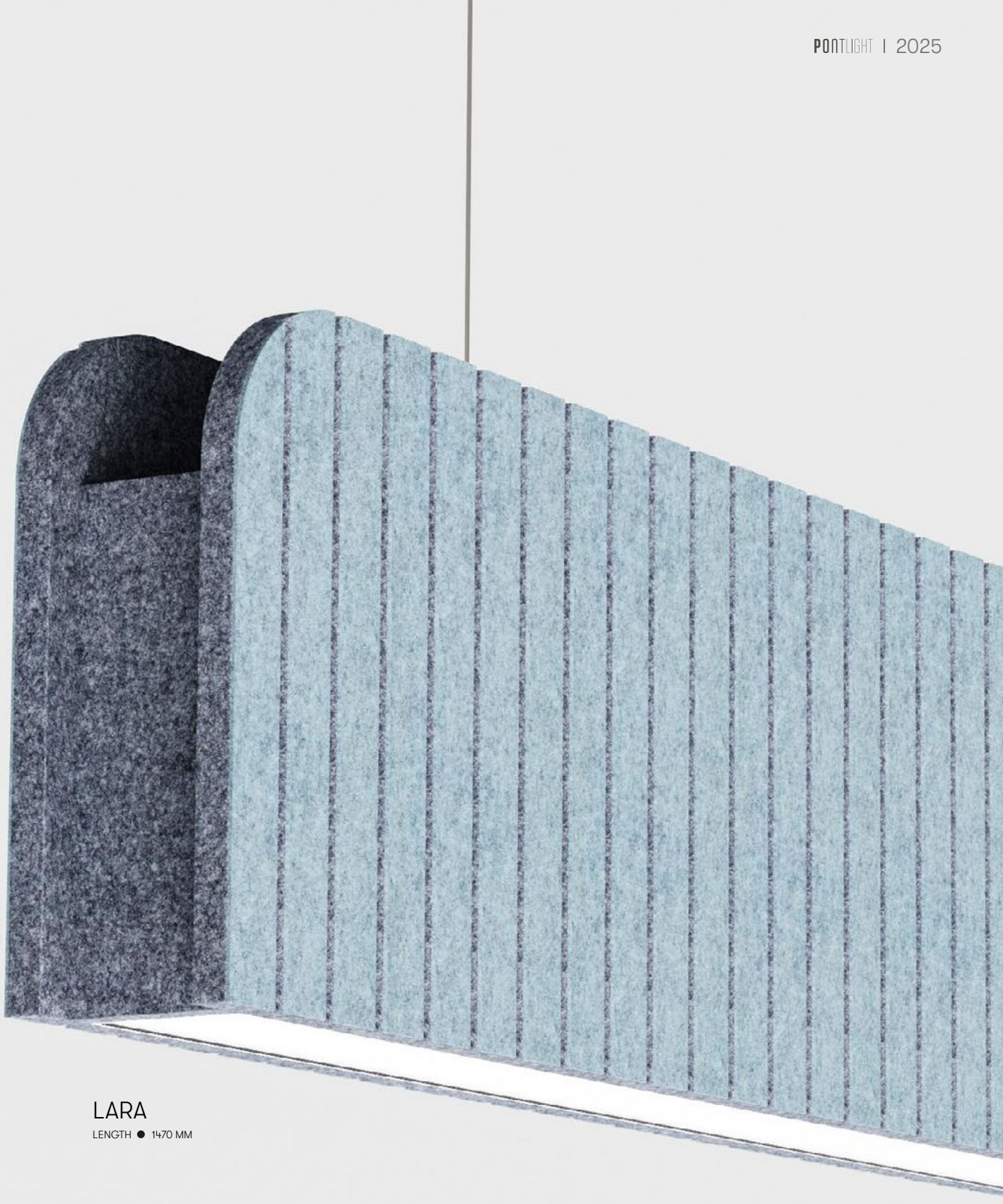

LARA

LENGTH ● 1470 MM

LARA
SPECIFIC DATA

ACOUSTIC PARAMETERS

Material:	PET Felt, 50% recycled from plastic bottles
Weight:	apx. 1500 g/m²
Thickness:	Natural Colors: 6mm or 12mm Color Selection: 7mm or 13mm
Flammability:	EU: EN 13501 / Result 'B-s1,d0'
Light fastness grade:	ISO 105 B02:1994 / Result '6+'
Maintenance:	Indoor use only. Cleaning methods: Vacuum regularly. Wipe clean with a damp cloth. Professionally dry clean. Bleach cleanable (only natural colors).

More information about Feltly Material on catalogue page 16.


Low Tone


Mid Tone


High Tone

FELTLY ACOUSTIC COLORS
(See on page 17)



BODY COLORS



B Black
G Grey
A Anthracite
W White
R RAL
S Special Colors

LIGHTING TYPES

1 Direct-only
2 Direct-Indirect
3 Indirect-only

MOUNTING TYPES



M Multi-Point Pendant

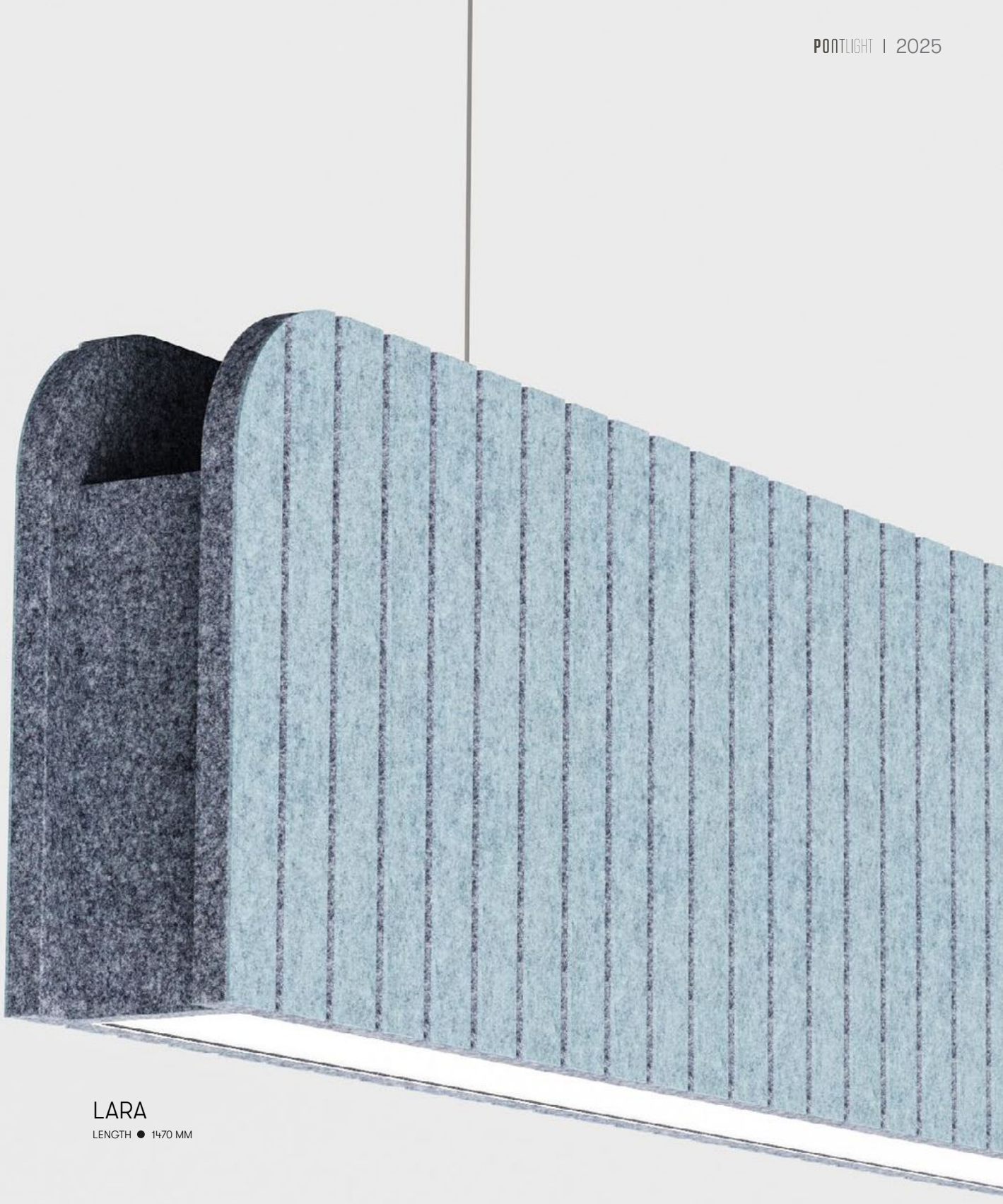

LARA

LENGTH ● 1470 MM





OLIVE



OLIVE

GENERAL INFORMATIONS

Body Parameters

MATERIALS

Aluminum luminaire body / Opal, microprismatic diffuser / Feltly Acoustic material.

MOUNTING

Multi-Point or Single-Point suspended luminaire.

Light Parameters

LIGHT SOURCE

LED, Opal or microprismatic diffuser, Direct only or Direct-Indirect. CRI>80 or CRI>90.

CONTROL

ON/OFF, DALI, PushDim, Bluetooth.

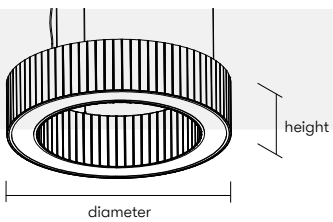

OLIVE **20**

HEIGHT	DIAMETERS		
● 200 mm	● Ø800 mm	● Ø1000 mm	● Ø1200 mm
PROFILE WIDTH			
● 100 mm	D: **58 W / 6496 lm**	**72 W / 8064 lm**	**87 W / 9744 lm**
	D/I: **87 W / 9744 lm**	**108 W / 12069 lm**	**130 W / 14616 lm**

DIFFUSER

- Ⓜ microprismatic
- Ⓢ standard (opal)
- Ⓛ lenses

COLOR TEMPERATURE

- ❷ 2700 K
- ❸ 3000 K
- ❹ 4000 K
- ❶ RGBW
- ❺ Tunable White

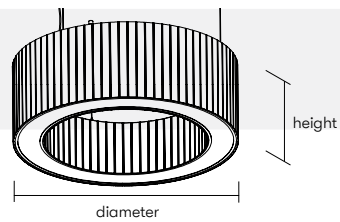

OLIVE **30**

HEIGHT	DIAMETERS		
● 300 mm	● Ø800 mm	● Ø1000 mm	● Ø1200 mm
PROFILE WIDTH			
● 100 mm	D: **58 W / 6496 lm**	**72 W / 8064 lm**	**87 W / 9744 lm**
	D/I: **87 W / 9744 lm**	**108 W / 12069 lm**	**130 W / 14616 lm**

DIFFUSER

- Ⓜ microprismatic
- Ⓢ standard (opal)
- Ⓛ lenses

COLOR TEMPERATURE

- ❷ 2700 K
- ❸ 3000 K
- ❹ 4000 K
- ❶ RGBW
- ❺ Tunable White

CE 220V 240V LEDs 50/60Hz

Lumen values are calculated at 4000K.



OLIVE **30**

DIAMETER ● Ø1000 MM
COLOR **PLN02** LIGHT GREY

OLIVE **20**

DIAMETER ● Ø800 MM
COLOR **PLN01** SPACE GREY

OLIVE ACOUSTIC
SPECIFIC DATA

ACOUSTIC PARAMETERS

Material:	PET Felt, 50% recycled from plastic bottles
Weight:	apx. 1500 g/m²
Thickness:	Natural Colors: 6mm or 12mm Color Selection: 7mm or 13mm
Flammability:	EU: EN 13501 / Result 'B-s1,d0'
Light fastness grade:	ISO 105 B02:1994 / Result '6+'
Maintenance:	Indoor use only. Cleaning methods: Vacuum regularly. Wipe clean with a damp cloth. Professionally dry clean. Bleach cleanable (only natural colors).

More information about Feltly Material on catalogue page 16.



Absorption Attenuation



Mid Tone High Tone

FELTLY ACOUSTIC COLORS

(See on page 17)



PLC05 PLC10 PLC12 PLC13 PLC16



PLC22 PLC23 PLC25 PLC17 PLC18



PLN03 PLN01 PLN04 PLN02 PLN06

BODY COLORS

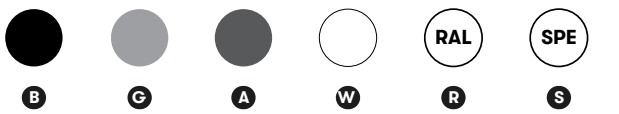

B Black G Grey A Anthracite W White R RAL S Special Colors

LIGHTING TYPES

1 Direct-only 2 Direct-Indirect 3 Indirect-only

MOUNTING TYPES



M Multi-Point Pendant P Single-Point Pendant



OLIVE **30**

DIAMETER ● Ø1200 MM

COLOR **PLN01** SPACE GREY

OLIVE **20**

DIAMETER ● Ø800 MM

COLOR **PLN02** LIGHT GREY





LIVIA

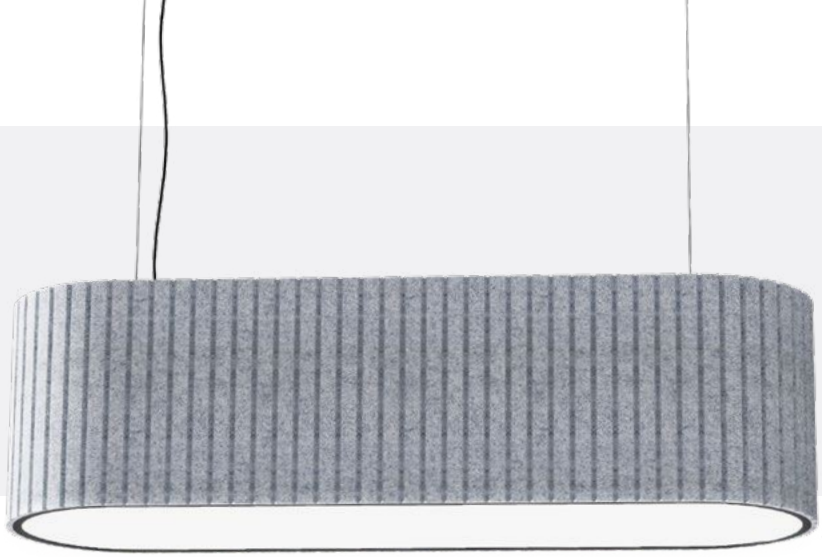

LIVIA

GENERAL INFORMATIONS

Body Parameters

MATERIALS

Aluminum luminaire body / Opal, microprismatic diffuser / Feltly Acoustic material.

MOUNTING

Multi-Point or Single-Point suspended luminaire.

Light Parameters

LIGHT SOURCE

LED, Opal or microprismatic diffuser, Direct only or Direct-Indirect. CRI>80 or CRI>90.

CONTROL

ON/OFF, DALI, PushDim,Bluetooth.

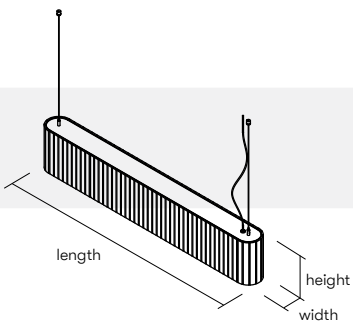

LIVIA **S**

HEIGHT
- 200 mm

WIDTH
- 100 mm

LENGTH

	597 mm	1432 mm	1712 mm
D:	**13 W / 1538 lm**	**33 W / 3689 lm**	**39 W / 4410 lm**
D/I:	**19 W / 2307 lm**	**49 W / 5533 lm**	**58 W / 6615 lm**

DIFFUSER
- M microprismatic
- S standard (opal)
- L lenses

COLOR TEMPERATURE
- 2 2700 K
- 3 3000 K
- 4 4000 K
- 1 RGBW
- 5 Tunable White

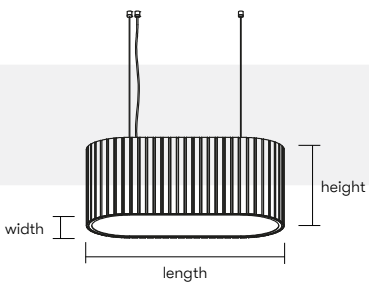

LIVIA **M**

HEIGHT
- 200 mm

WIDTH
- 200 mm

LENGTH

	502 mm	640 mm	920 mm
D:	**20 W / 2200 lm**	**30 W / 3300 lm**	**40 W / 4400 lm**
D/I:	**28 W / 3300 lm**	**49 W / 4950 lm**	**58 W / 6600 lm**

DIFFUSER
- M microprismatic
- S standard (opal)
- L lenses

COLOR TEMPERATURE
- 2 2700 K
- 3 3000 K
- 4 4000 K
- 1 RGBW
- 5 Tunable White

CE 220V 240V LEDs 50/60Hz

Lumen values are calculated at 4000K.

LIVIA **M**

LENGTH ● 502 MM

COLOR **PLN03** GRAPHITE BLACK

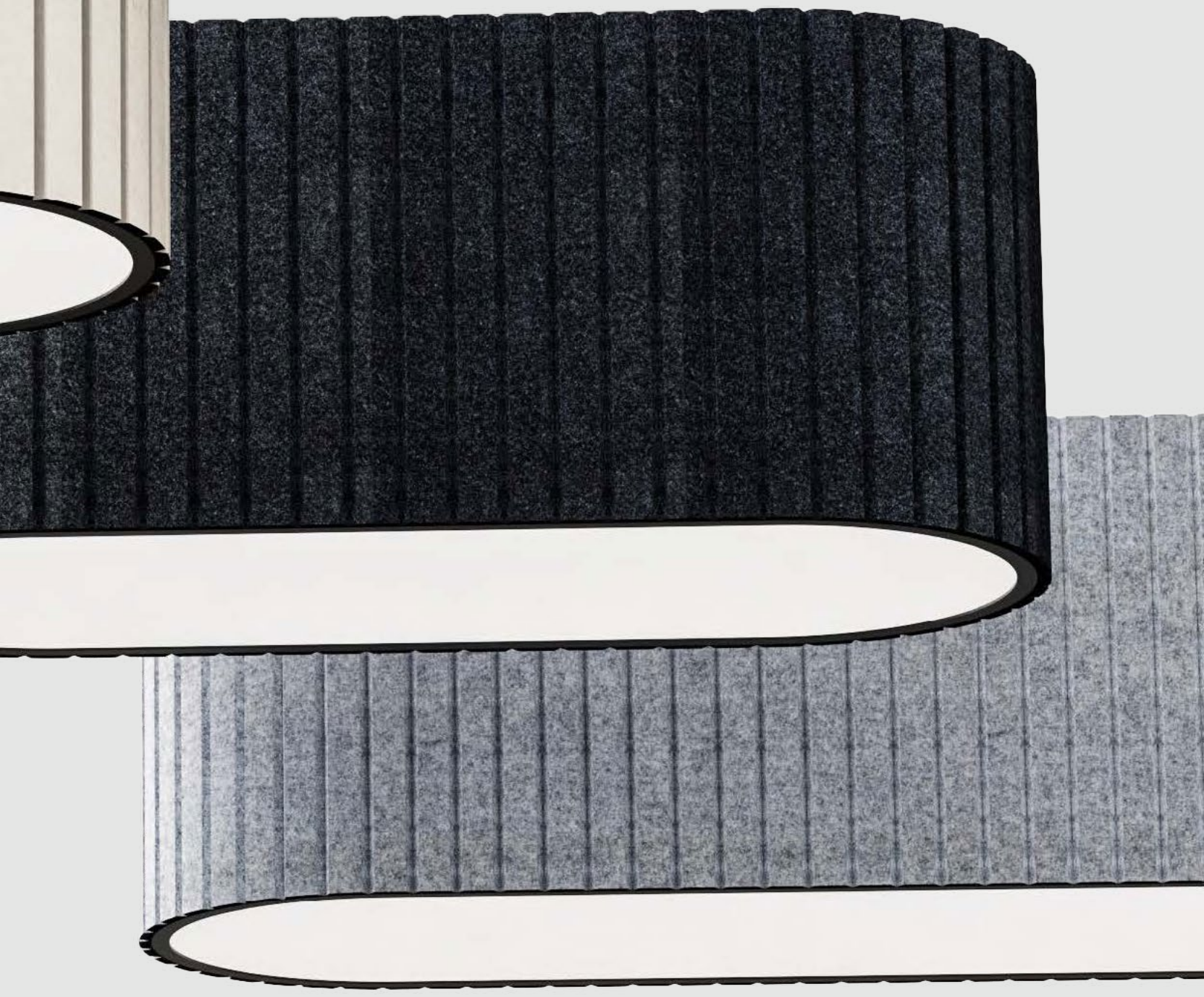

LIVIA **S**

LENGTH ● 1432 MM

COLOR **PLN04** MIDDLE GREY

LIVIA ACOUSTIC
SPECIFIC DATA

ACOUSTIC PARAMETERS

Material:	PET Felt, 50% recycled from plastic bottles
Weight:	apx. 1500 g/m²
Thickness:	Natural Colors: 6mm or 12mm Color Selection: 7mm or 13mm
Flammability:	EU: EN 13501 / Result 'B-s1,d0'
Light fastness grade:	ISO 105 B02:1994 / Result '6+'
Maintenance:	Indoor use only. Cleaning methods: Vacuum regularly. Wipe clean with a damp cloth. Professionally dry clean. Bleach cleanable (only natural colors).

More information about Feltly Material on catalogue page 16.


Low Tone


Mid Tone


High Tone

FELTLY ACOUSTIC COLORS
(See on page 17)



BODY COLORS



B Black
G Grey
A Anthracite
W White
R RAL
S Special Colors

LIGHTING TYPES

1 Direct-only
2 Direct-Indirect
3 Indirect-only

MOUNTING TYPES



M Multi-Point Pendant



LIVIA **S**

LENGTH ● 1432 MM

COLOR **PLN01** SPACE GREY



LIVIA **S**

LENGTH ● 592 MM

COLOR **PLN06** MOON BEIGE





RIVA



RIVA

GENERAL INFORMATIONS

Body Parameters

MATERIALS

Aluminum luminaire body / Opal, microprismatic diffuser / Feltly Acoustic material.

MOUNTING

Multi-Point or Single-Point suspended luminaire.

Light Parameters

LIGHT SOURCE

LED, Opal or microprismatic diffuser, Direct only or Direct-Indirect. CRI>80 or CRI>90.

CONTROL

ON/OFF, DALI, PushDim, Bluetooth.

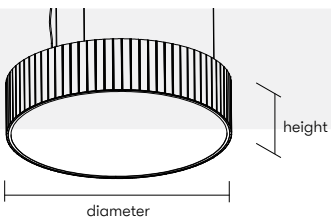

RIVA **20**

HEIGHT

- 200 mm

DIAMETERS

	● Ø600 mm	● Ø800 mm	● Ø1000 mm
D:	**60 W / 7500 lm**	**80 W / 10000 lm**	**100 W / 12500 lm**
D/I:	**90 W / 11250 lm**	**120 W / 15000 lm**	**150 W / 18750 lm**

DIFFUSER

- (M) microprismatic
- (S) standard (opal)
- (L) lenses

COLOR TEMPERATURE

- (2) 2700 K
- (3) 3000 K
- (4) 4000 K
- (1) RGBW
- (5) Tunable White

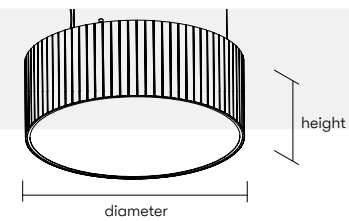

RIVA **30**

HEIGHT

- 300 mm

DIAMETERS

	● Ø600 mm	● Ø800 mm	● Ø1000 mm
D:	**60 W / 7500 lm**	**80 W / 10000 lm**	**100 W / 12500 lm**
D/I:	**90 W / 11250 lm**	**120 W / 15000 lm**	**150 W / 18750 lm**

DIFFUSER

- (M) microprismatic
- (S) standard (opal)
- (L) lenses

COLOR TEMPERATURE

- (2) 2700 K
- (3) 3000 K
- (4) 4000 K
- (1) RGBW
- (5) Tunable White

CE 220V 240V LEDs 50/60Hz

Lumen values are calculated at 4000K.

RIVA **20**

DIAMETER ● Ø600 MM

COLOR **PLN03** GRAPHITE BLACK



RIVA **20**

DIAMETER ● Ø1000 MM

COLOR **PLN01** SPACE GREY

RIVA ACOUSTIC
SPECIFIC DATA

ACOUSTIC PARAMETERS

Material:	PET Felt, 50% recycled from plastic bottles
Weight:	apx. 1500 g/m²
Thickness:	Natural Colors: 6mm or 12mm Color Selection: 7mm or 13mm
Flammability:	EU: EN 13501 / Result 'B-s1,d0'
Light fastness grade:	ISO 105 B02:1994 / Result '6+'
Maintenance:	Indoor use only. Cleaning methods: Vacuum regularly. Wipe clean with a damp cloth. Professionally dry clean. Bleach cleanable (only natural colors).

More information about Feltly Material on catalogue page 16.


Diffusion


Absorption


Low Tone


Mid Tone


High Tone

FELTLY ACOUSTIC COLORS
(See on page 17)



BODY COLORS



Black | Grey | Anthracite | White | RAL | Special Colors

LIGHTING TYPES



Direct-only | Direct-Indirect | Indirect-only

MOUNTING TYPES

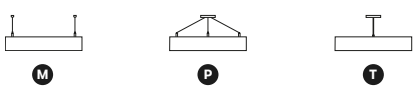

Multi-Point Pendant | Single-Point Pendant | Tube Pendant

RIVA **20**

DIAMETER ● Ø600 MM

COLOR **PLN03** GRAPHITE BLACK



RIVA **20**

DIAMETER ● Ø1000 MM

COLOR **PLN01** SPACE GREY





RIVA SLIM



RIVA SLIM

GENERAL INFORMATIONS

Body Parameters

MATERIALS

Aluminum luminaire body / Opal, microprismatic diffuser / Feltly Acoustic material.

MOUNTING

Multi-Point or Single-Point suspended luminaire.

Light Parameters

LIGHT SOURCE

LED, Opal or microprismatic diffuser, Direct only or Direct/Indirect. CRI>80 or CRI>90.

CONTROL

ON/OFF, DALI, PushDim, Bluetooth.

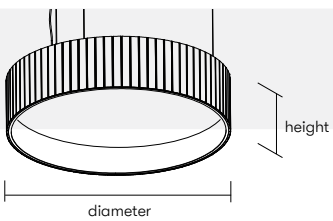

RIVA **SLIM**

HEIGHT

- 200 mm

DIAMETER

	● Ø600 mm	● Ø800 mm	● Ø1000 mm
D:	**60 W/ 7500 lm**	**80 W/ 10000 lm**	**100 W/ 12500 lm**
D/I:	**90 W/ 11500 lm**	**120 W/ 15000 lm**	**150 W/ 18750 lm**

DIFFUSER

- (M) microprismatic
- (S) standard (opal)
- (L) lenses

COLOR TEMPERATURE

- (2) 2700 K
- (3) 3000 K
- (4) 4000 K
- (1) RGBW
- (5) Tunable White

CE 220V 240V LEDs 50/60Hz

Lumen values are calculated at 4000K.



RIVA **SLIM**

DIAMETER ● Ø600 MM

COLOR **PLN02** LIGHT GREY

RIVA SLIM
SPECIFIC DATA

ACOUSTIC PARAMETERS

Material:	PET Felt, 50% recycled from plastic bottles
Weight:	apx. 1500 g/m²
Thickness:	Natural Colors: 6mm or 12mm Color Selection: 7mm or 13mm
Flammability:	EU: EN 13501 / Result 'B-s1,d0'
Light fastness grade:	ISO 105 B02:1994 / Result '6+'
Maintenance:	Indoor use only. Cleaning methods: Vacuum regularly. Wipe clean with a damp cloth. Professionally dry clean. Bleach cleanable (only natural colors).

More information about Feltly Material on catalogue page 16.


Diffusion


Absorption


Low Tone


Mid Tone


High Tone

FELTLY ACOUSTIC COLORS
(See on page 17)



BODY COLORS



Black | Grey | Anthracite | White | RAL | Special Colors

LIGHTING TYPES



Direct-only | Direct-Indirect | Indirect-only

MOUNTING TYPES

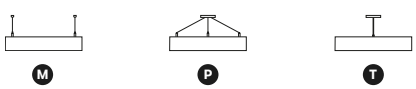

Multi-Point Pendant | Single-Point Pendant | Tube Pendant



RIVA **SLIM**

DIAMETER ● Ø600 MM

COLOR **PLN02** LIGHT GREY





ANETA



ANETA

GENERAL INFORMATIONS

Body Parameters

MATERIALS

Aluminum luminaire body / Opal diffuser / Feltly Acoustic material.

MOUNTING

Multi-Point or Single-Point suspended luminaire.

Light Parameters

LIGHT SOURCE

LED, Opal, Direct only. CRI>80 or CRI>90.

CONTROL

External driver. ON/OFF, DALI, PushDim, Bluetooth.

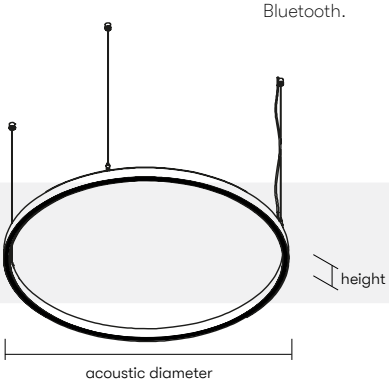

ANETA

HEIGHT
- 88 mm

PROFILE WIDTH
- 15 mm

DIAMETER

Ø800 mm	Ø1000mm	Ø1200mm	Ø1400 mm
45 W / 3600 lm	**55 W / 4400 lm**	**67 W / 5360 lm**	**80 W / 6400 lm**

DIFFUSER
- M microprismatic
- S standard (opal)
- L lenses

COLOR TEMPERATURE
- 2 2700 K
- 3 3000 K
- 4 4000 K
- 1 RGBW
- 5 Tunable White

CE 220V 240V LEDs 50/60Hz

Lumen values are calculated at 4000K.

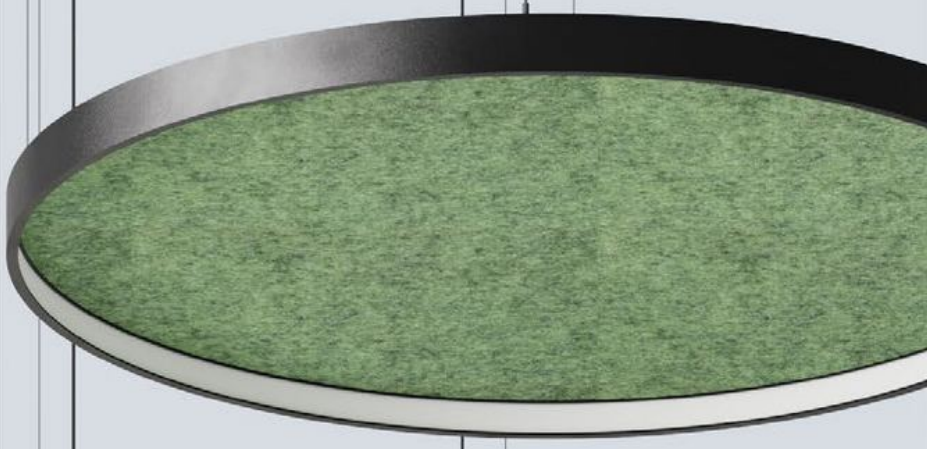

ANETA

DIAMETER ● Ø1200 MM
COLOR **PLC13** OXLEY

ANETA

DIAMETER ● Ø800 MM
COLOR **PLC25** PUMPKIN



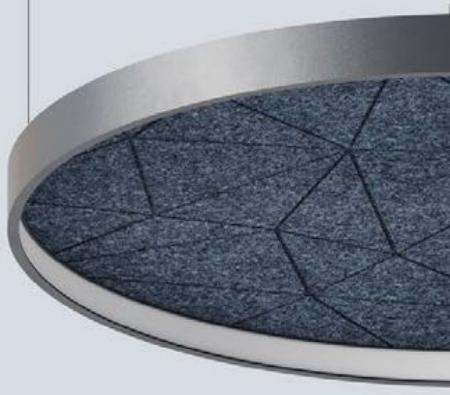

ANETA

DIAMETER ● Ø1000 MM
COLOR **PLN01** SPACE GREY

ANETA

DIAMETER ● Ø1000 MM
COLOR **PLC18** LEMON

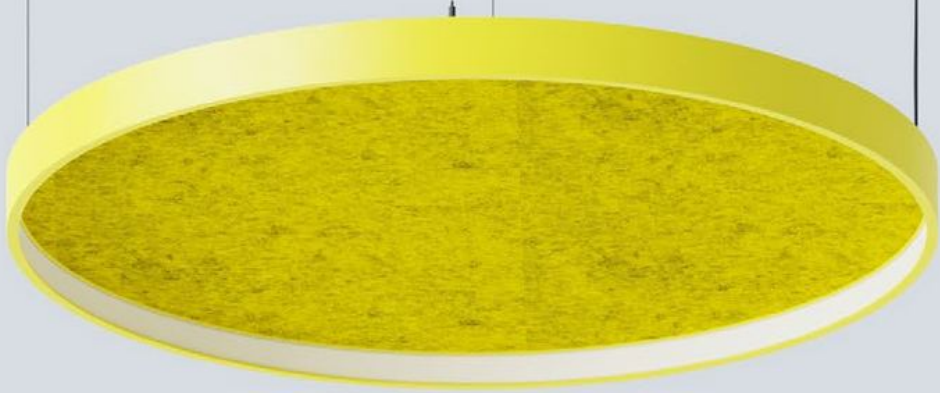

ANETA
SPECIFIC DATA

ACOUSTIC PARAMETERS

Material:	PET Felt, 50% recycled from plastic bottles
Weight:	apx. 1500 g/m²
Thickness:	Natural Colors: 6mm or 12mm Color Selection: 7mm or 13mm
Flammability:	EU: EN 13501 / Result 'B-s1,d0'
Light fastness grade:	ISO 105 B02:1994 / Result '6+'
Maintenance:	Indoor use only. Cleaning methods: Vacuum regularly. Wipe clean with a damp cloth. Professionally dry clean. Bleach cleanable (only natural colors).

More information about Feltly Material on catalogue page 16.


Diffusion


Absorption


Mid Tone


High Tone

LIGHTING TYPES



1 Direct-only

2 Direct-Indirect

3 Indirect-only

MOUNTING TYPES
with external driver


M Multi-Point Pendant


P Single-Point Pendant

FELTLY ACOUSTIC COLORS
(See on page 17)



BODY COLORS



B Black

G Grey

A Anthracite

W White

R RAL

S Special Colors

PATTERNS

V-Cut technology. Please consult with us.

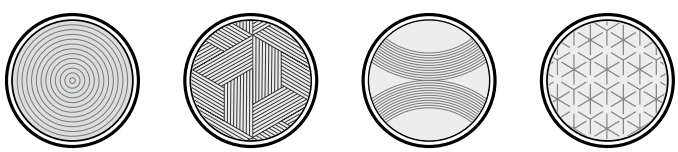

ANETA

DIAMETER ● Ø1200 MM
COLOR **PLN06** MOON BEIGE



ANETA

DIAMETER ● Ø800 MM
COLOR **PLN02** LIGHT GREY



Acoustic Catalogue

by

PONTLIGHT

DESIGNED WITH YOU

PONTLIGHT

LED Zona®
ОСВЕТИТЕЛНИ РЕШЕНИЯ

Харесахте ли нещо от каталога?

Разгледайте и поръчайте продукти на Pont Light онлайн
на led-zona.bg – с актуални цени и наличности.

Продуктите на Pont Light

Сканирайте или кликнете

Разгледайте продуктите →

Каталози на Pont Light

Сканирайте или кликнете

Още каталози →

www.led-zona.bg

T: 0888 065 970 | E: sales@led-zona.bg

Сфера Лайт ООД · гр. София, ж.к. Банишора, ул. Опълченска, бл. 54 (до 7-ма поликлиника)